CACTUS
REV 0.991
FAB G RETAIL

PAGE	CONTENTS
[1]	COVER PAGE
[2]	SOC: PCIEX,CLOCKS
[3]	SOC: VIDEO
[4]	SOC: POWER: MEMIO,CPUCORE,NBCORE,MISC
[5]	SOC: POWER: V_GFXCORE
[6]	SOC: POWER: VSS
[7]	SOC: POWER: VSS
[8]	SOC: MEMORY PARTITION F1 & F0
[9]	SOC: MEMORY PARTITION E1 & E0
[10]	SOC: MEMORY PARTITION D1 & D0
[11]	SOC: MEMORY PARTITION C1 & C0
[12]	SOC: MEMORY PARTITION B1 & B0
[13]	SOC: MEMORY PARTITION A1 & A0
[14]	SOC: DEBUG, SB SIGNALS, V_BAT
[15]	SOC: DECOUPLING
[16]	SOC: DECOUPLING
[17]	SOC: DECOUPLING
[18]	MEMORY: CHANNEL A0
[19]	MEMORY: CHANNEL A1
[20]	MEMORY: CHANNEL B0
[21]	MEMORY: CHANNEL B1
[22]	MEMORY: CHANNEL A/B DECOUPLING
[23]	MEMORY: CHANNEL C0
[24]	MEMORY: CHANNEL C1
[25]	MEMORY: CHANNEL D0
[26]	MEMORY: CHANNEL D1
[27]	MEMORY: CHANNEL C/D DECOUPLING
[28]	MEMORY: CHANNEL E0
[29]	MEMORY: CHANNEL E1
[30]	MEMORY: CHANNEL F0
[31]	MEMORY: CHANNEL F1
[32]	MEMORY: CHANNEL E/F DECOUPLING
[33]	MEMORY: ADDITIONAL DECOUPLING
[34]	KIC: USB
[35]	KIC: PCIEX, SATA, VIDEO
[36]	KIC: SMC
[37]	KIC: FACET
[38]	KIC: POWER
[39]	KIC: CLOCKS, STRAPPING, POR
[40]	KIC: POWER
[41]	KIC: DECOUPLING
[42]	ETHERNET CONTROLLER
[43]	EMMC MEMORY
[44]	CONN: RJ45,TOSLINK
[45]	CONN: USB (FRONT & REAR)
[46]	CONN: WIFI
[47]	CONN: HDMI IN
[48]	CONN: HDMI OUT
[49]	HDMI LOAD SWITCHES
[50]	CONN: ODD & HDD
[51]	CONN: FRONT PANEL, FAN, AUDIO
[52]	CONN: POWER
[53]	VREGS: INPUT FILTERS
[54]	VREGS: CPUCORE & GFXCORE
[55]	VREGS: GFXCORE OUTPUT PHASE 1 & 2
[56]	VREGS: GFXCORE OUTPUT PHASE 3 & 4
[57]	VREGS: CPUCORE OUTPUT PHASE
[58]	VREGS: MEMIO & MEMPHY
[59]	VREGS: MEMPHY OUTPUT
[60]	VREGS: MEMIO OUTPUT
[61]	VREGS: NBCORE
[62]	VREGS: V5P0
[63]	VREGS: V3P3, VSOC1P8
[64]	VREGS: VSOCPHY/VFUSE
[65]	VREGS: V_SB1P8, V_SB1P1
[66]	VREGS: V3P3 STANDBY
[67]	VREGS: V1P1 STANDBY, V1P8 STANDBY
[68]	STANDBY GATES
[69]	IR BLASTER
[70]	I2C
[71]	MARGIN: SOCPHY,SOC1P8,MEMIO,NBCORE
[72]	MONITOR: VSOC1P8, VSOCPHY, V12P0
[73]	CONN: FACET BOARD
[74]	CONN: SWITCHES
[75]	CONN: HDT
[76]	CONN: M.2
[77]	CLOCK BUFFER
[78]	PREMIUM SPEAKER (SE/LE)
[79]	DEBUG: VR HEADERS, TEST POINTS, CONNECTORS
[80]	LABELS AND MOUNTING
[81]	FRONT PANEL USB - NESTED PCB
[82]	BOM DEFINITIONS

RULES: (APPLIED WHEN POSSIBLE)
1. MSB TO LSB IS TOP TO BOTTOM
2. WHEN POSSIBLE: INPUTS ON LEFT, OUTPUTS ON RIGHT
3. ORDER OF PAGES=CHIP INTERFACES, TERMINATION, POWER, DECOUPLING
4. AVOID USING OFF PAGE CONNECTORS FOR ON PAGE CONNECTIONS
5. LANED SIGNALS ARE GROUPED ON SYMBOLS
6. TRANSIMITTER NAME USED AS PREFIX WITH RX AND TX CONNECTIONS
7. SUFFIX V_ IS USED FOR VOLTAGE RAIL SIGNAL NAMES
8. SUFFIX _DP AND _DN ARE USED FOR DIFFERIENTAL PAIRS
9. UNNAMED NETS ARE NAMED WITH /2 TEXT SIZE
10. SUFFIX _N FOR ACTIVE LOW OR N JUNCTION
12. SUFFIX _P FOR P JUNCTION
13. SUFFIX _EN FOR ENABLE
14. 'CLK' FOR CLOCKS, 'RST' FOR RESETS
15. PWRGD FOR POWER GOOD
16. REV AND FAB ARE SET USING CUSTOM VARIABLES
TOOLS>OPTIONS>VARIABLES

DRAWING
Thu Apr 20 16:18:47 2017

MICROSOFT CONFIDENTIAL	PROJECT NAME	PAGE	CSA PAGE	FAB	VER
	Cactus	1/82	1/82	G-R	0.991

SOC:PCIEX,CLOCKS

NOTES:

1.TO SUPPORT PCIE SPARE LANE INTERFACE (J28), POPULATE C215 AND C217

2.SEE PAGES 77 AND 79 FOR ADDITIONAL PCIE SPARE LANE INFORMATION

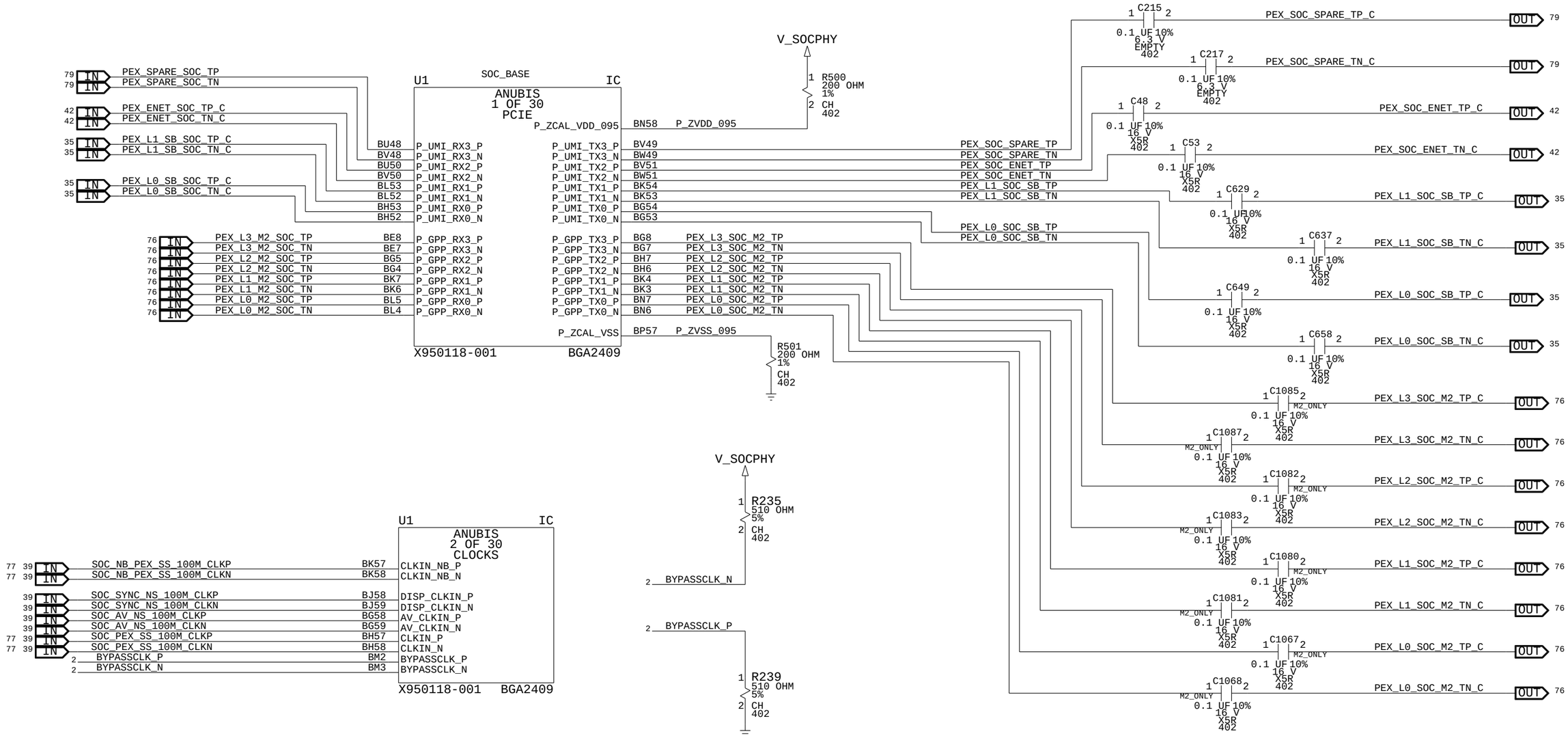

MS_PART#	MATL	REF_DES	DESCR.	BOM PROPERTY
X950118-001	IC	U1	PROCSR-CPU-GPU,SM,1.0GHZ,BGA2049,ANUBIS	SOC_INCLUDE
X950118-001	EMPTY	U1	PROCSR-CPU-GPU,SM,1.0GHZ,BGA2049,ANUBIS	SOC_EMPTY

MICROSOFT CONFIDENTIAL	PROJECT NAME	PAGE	CSA PAGE	FAB	VER
	Cactus	2/82	2/82	G-R	0.991

SOC: VIDEO

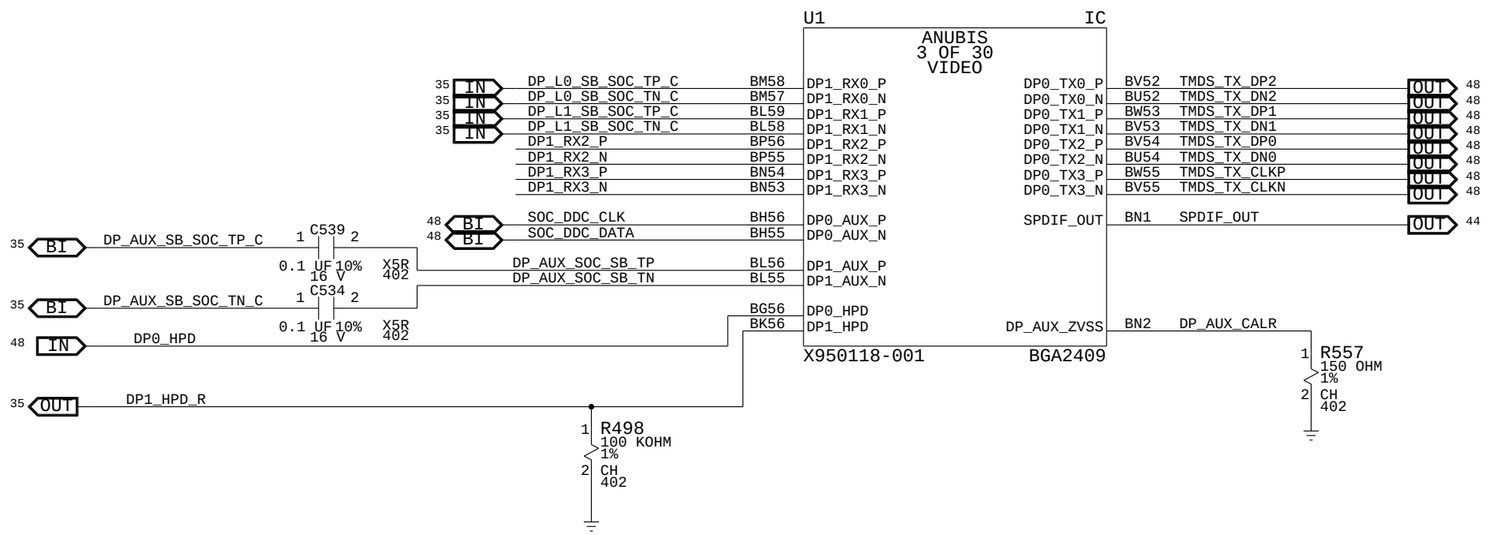

DVI PCB ROUTING ORDERING	DP PCB ROUTING ORDERING	PIN NAME
TMDS CLOCK -	DP LANE 3 -	DP0_TX3_N
TMDS CLOCK +	DP LANE 3 +	DP0_TX3_P
TMDS DATA0 -	DP LANE 2 -	DP0_TX2_N
TMDS DATA0 +	DP LANE 2 +	DP0_TX2_P
TMDS DATA1 -	DP LANE 1 -	DP0_TX1_N
TMDS DATA1 +	DP LANE 1 +	DP0_TX1_P
TMDS DATA2 -	DP LANE 0 -	DP0_TX0_N
TMDS DATA2 +	DP LANE 0 +	DP0_TX0_P

SOC: POWER: MEMIO,MEMPHY,CPUCORE,NBCORE,MISC

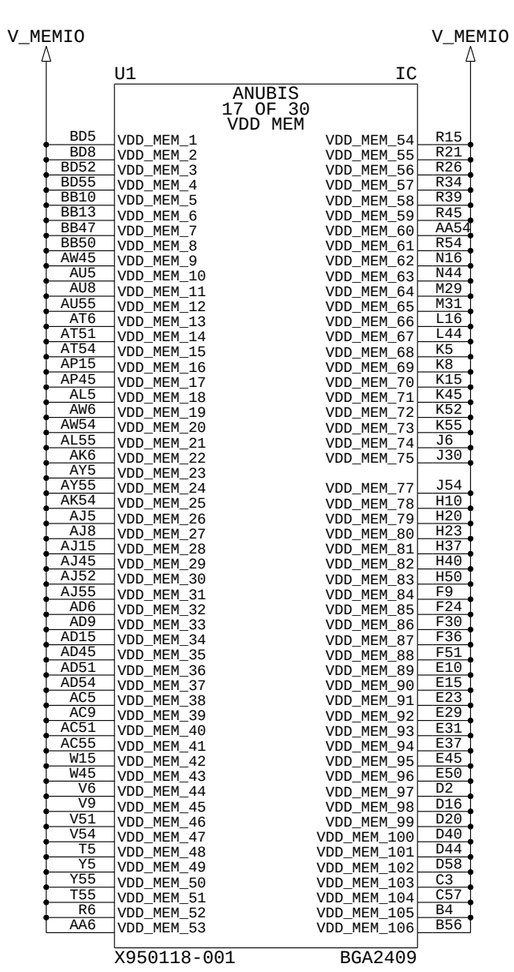

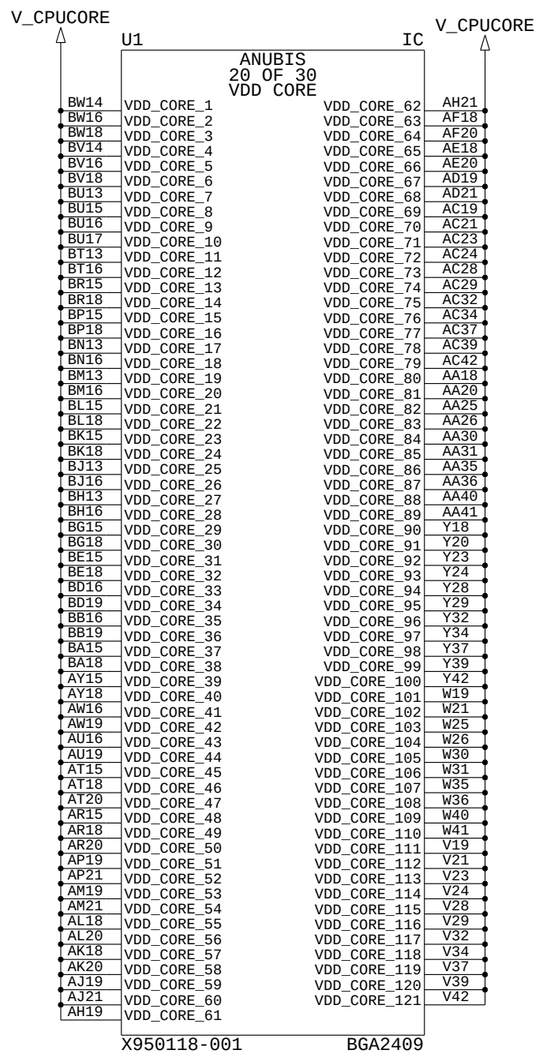

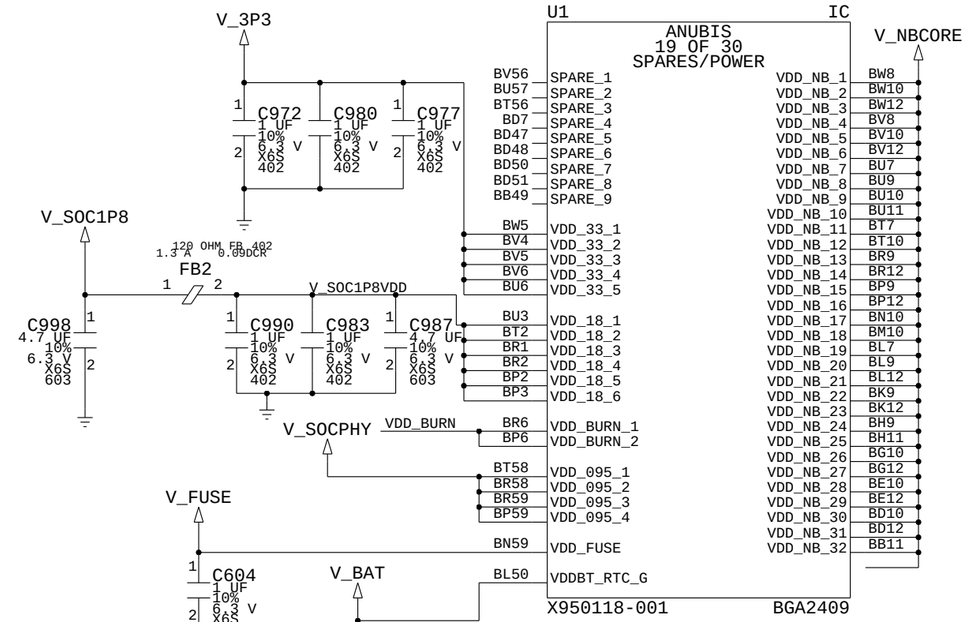

NOTE: X6S/X7R CAPACITORS USED NEAR SOC
DUE TO HIGHER TEMPERATURES IN AREA

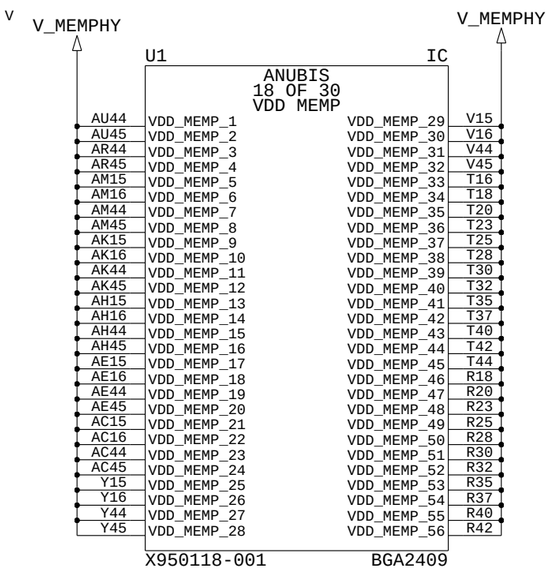

MICROSOFT CONFIDENTIAL	PROJECT NAME	PAGE	CSA PAGE	FAB	VER
	Cactus	4/82	4/82	G-R	0.991

SOC: POWER: GFXCORE

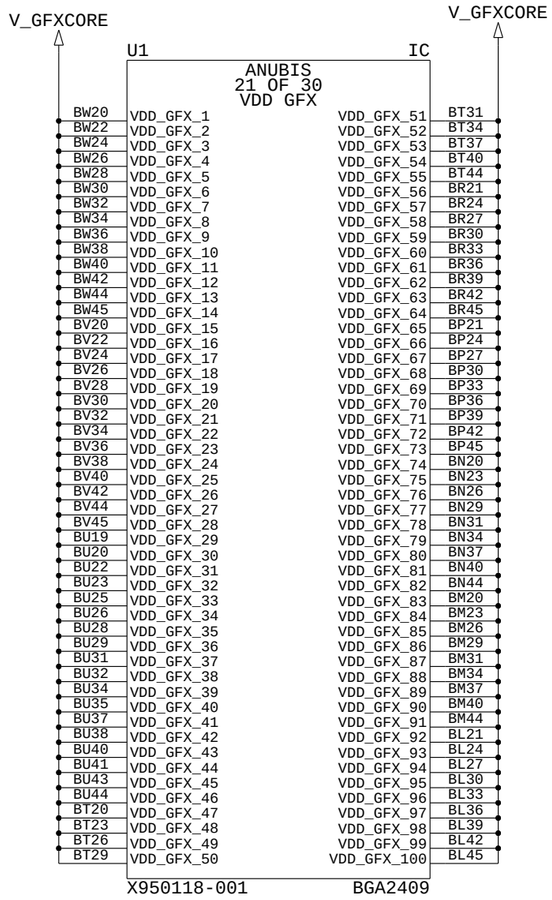

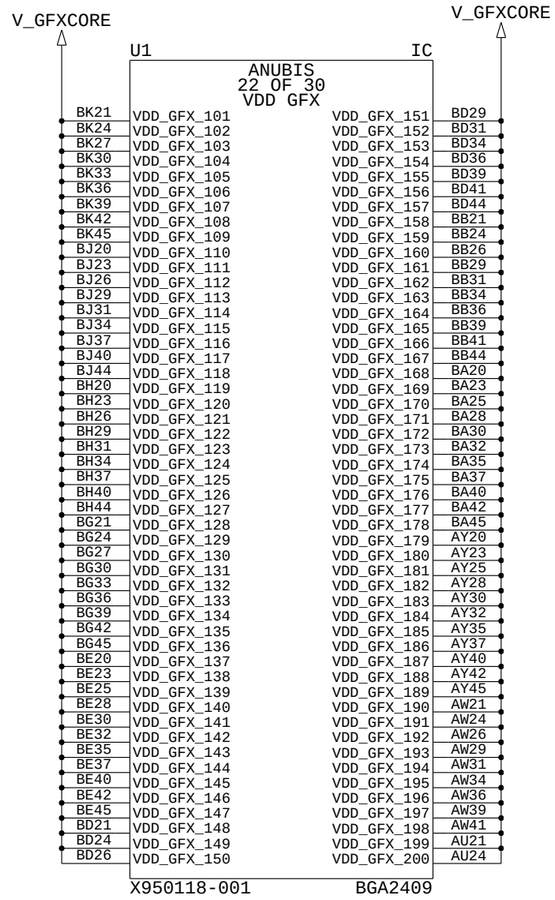

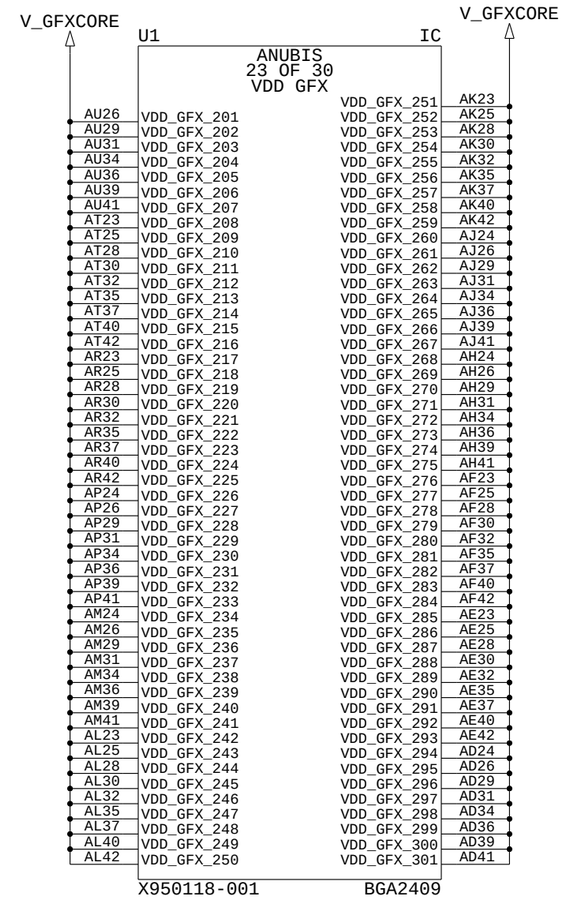

SOC: POWER: VSS

U1 — IC

ANUBIS 24 OF 30 GROUND

BW2	VSS_1	VSS_65	BU42
BW3	VSS_2	VSS_66	BU45
BW4	VSS_3	VSS_67	BU46
BW6	VSS_4	VSS_68	BU47
BW9	VSS_5	VSS_69	BU49
BW11	VSS_6	VSS_70	BU51
BW13	VSS_7	VSS_71	BU53
BW15	VSS_8	VSS_72	BU55
BW17	VSS_9	VSS_73	BU59
BW19	VSS_10	VSS_74	BT1
BW21	VSS_11	VSS_75	BT4
BW23	VSS_12	VSS_76	BT6
BW25	VSS_13	VSS_77	BT9
BW27	VSS_14	VSS_78	BT12
BW29	VSS_15	VSS_79	BT15
BW31	VSS_16	VSS_80	BT18
BW33	VSS_17	VSS_81	BT21
BW35	VSS_18	VSS_82	BT24
BW37	VSS_19	VSS_83	BT27
BW39	VSS_20	VSS_84	BT30
BW41	VSS_21	VSS_85	BT33
BW43	VSS_22	VSS_86	BT36
BW48	VSS_23	VSS_87	BT39
BW50	VSS_24	VSS_88	BT42
BW52	VSS_25	VSS_89	BT45
BW54	VSS_26	VSS_90	BT47
BW56	VSS_27	VSS_91	BT59
BW57	VSS_28	VSS_92	BR3
BW58	VSS_29	VSS_93	BR7
BV1	VSS_30	VSS_94	BR10
BV2	VSS_31	VSS_95	BR13
BV9	VSS_32	VSS_96	BR16
BV11	VSS_33	VSS_97	BR20
BV13	VSS_34	VSS_98	BR23
BV15	VSS_35	VSS_99	BR26
BV17	VSS_36	VSS_100	BR29
BV19	VSS_37	VSS_101	BR31
BV21	VSS_38	VSS_102	BR34
BV23	VSS_39	VSS_103	BR37
BV25	VSS_40	VSS_104	BR40
BV27	VSS_41	VSS_105	BR44
BV29	VSS_42	VSS_106	BR47
BV31	VSS_43	VSS_107	BR50
BV33	VSS_44	VSS_108	BR53
BV35	VSS_45	VSS_109	J51
BV37	VSS_46	VSS_110	BP1
BV39	VSS_47	VSS_111	BP5
BV41	VSS_48	VSS_112	BP7
BV43	VSS_49	VSS_113	BP10
BV58	VSS_50	VSS_114	BP13
BV59	VSS_51	VSS_115	BP16
BU1	VSS_52	VSS_116	BP20
BU5	VSS_53	VSS_117	BP23
BU8	VSS_54	VSS_118	BP26
BU12	VSS_55	VSS_119	BP29
BU14	VSS_56	VSS_120	BP31
BU18	VSS_57	VSS_121	BP34
BU21	VSS_58	VSS_122	BP37
BU24	VSS_59	VSS_123	BP40
BU27	VSS_60	VSS_124	BP44
BU30	VSS_61	VSS_125	BP48
BU33	VSS_62	VSS_126	BP51
BU36	VSS_63	VSS_127	BP54
BU39	VSS_64	VSS_128	BN3

X950118-001 BGA2409

U1 — IC

ANUBIS 25 OF 30 GROUND

BN5	VSS_129	VSS_193	BK34
BN9	VSS_130	VSS_194	BK37
BN12	VSS_131	VSS_195	BK40
BN15	VSS_132	VSS_196	BK44
BN18	VSS_133	VSS_197	BK50
BN21	VSS_134	VSS_198	BK52
BN24	VSS_135	VSS_199	BK55
BN27	VSS_136	VSS_200	BK59
BN30	VSS_137	VSS_201	BJ3
BN33	VSS_138	VSS_202	BJ12
BN36	VSS_139	VSS_203	BJ15
BN39	VSS_140	VSS_204	BJ18
BN42	VSS_141	VSS_205	BJ21
BN45	VSS_142	VSS_206	BJ24
BN55	VSS_143	VSS_207	BJ27
BN57	VSS_144	VSS_208	BJ30
BM1	VSS_145	VSS_209	BJ33
BM9	VSS_146	VSS_210	BJ36
BM12	VSS_147	VSS_211	BJ39
BM15	VSS_148	VSS_212	BJ42
BM18	VSS_149	VSS_213	BJ45
BM21	VSS_150	VSS_214	BJ47
BM24	VSS_151	VSS_215	BJ57
BM27	VSS_152	VSS_216	BH1
BM30	VSS_153	VSS_217	BH5
BM33	VSS_154	VSS_218	BH8
BM36	VSS_155	VSS_219	BH10
BM39	VSS_156	VSS_220	BH12
BM42	VSS_157	VSS_221	BH15
BM45	VSS_158	VSS_222	BH18
BM47	VSS_159	VSS_223	BH21
BM50	VSS_160	VSS_224	BH24
BM59	VSS_161	VSS_225	BH27
BL3	VSS_162	VSS_226	BH30
BL6	VSS_163	VSS_227	BH33
BL8	VSS_164	VSS_228	BH36
BL10	VSS_165	VSS_229	BH39
BL13	VSS_166	VSS_230	BH42
BL16	VSS_167	VSS_231	BH45
BL20	VSS_168	VSS_232	BH47
BL23	VSS_169	VSS_233	BH48
BL26	VSS_170	VSS_234	BH51
BL29	VSS_171	VSS_235	BH54
BL31	VSS_172	VSS_236	BH59
BL34	VSS_173	VSS_237	BG3
BL37	VSS_174	VSS_238	BG6
BL40	VSS_175	VSS_239	BG9
BL44	VSS_176	VSS_240	BG11
BL47	VSS_177	VSS_241	BG13
BL48	VSS_178	VSS_242	BG16
BL51	VSS_179	VSS_243	BG20
BL54	VSS_180	VSS_244	BG23
BL57	VSS_181	VSS_245	BG26
BK1	VSS_182	VSS_246	BG29
BK5	VSS_183	VSS_247	BG31
BK8	VSS_184	VSS_248	BG34
BK10	VSS_185	VSS_249	BG37
BK13	VSS_186	VSS_250	BG40
BK16	VSS_187	VSS_251	BG44
BK20	VSS_188	VSS_252	BG49
BK23	VSS_189	VSS_253	BG52
BK26	VSS_190	VSS_254	BG55
BK29	VSS_191	VSS_255	BG57
BK31	VSS_192	VSS_256	BF1

X950118-001 BGA2409

U1 — IC

ANUBIS 26 OF 30 GROUND

BF59	VSS_257	VSS_321	BA3
BE2	VSS_258	VSS_322	BA16
BE3	VSS_259	VSS_323	BA19
BE6	VSS_260	VSS_324	BA21
BE9	VSS_261	VSS_325	BA24
BE11	VSS_262	VSS_326	BA26
BE13	VSS_263	VSS_327	BA29
BE16	VSS_264	VSS_328	BA31
BE19	VSS_265	VSS_329	BA34
BE21	VSS_266	VSS_330	BA36
BE24	VSS_267	VSS_331	BA39
BE26	VSS_268	VSS_332	BA41
BE29	VSS_269	VSS_333	BA44
BE31	VSS_270	VSS_334	BA57
BE34	VSS_271	VSS_335	BA58
BE36	VSS_272	VSS_336	AK9
BE39	VSS_273	VSS_337	AY8
BE41	VSS_274	VSS_338	AY11
BE44	VSS_275	VSS_339	AY16
BE48	VSS_276	VSS_340	AY19
BE51	VSS_277	VSS_341	AY21
BE54	VSS_278	VSS_342	AY24
BE57	VSS_279	VSS_343	AY26
BE58	VSS_280	VSS_344	AY29
BD9	VSS_281	VSS_345	AY31
BD11	VSS_282	VSS_346	AY34
BD15	VSS_283	VSS_347	AY36
BD18	VSS_284	VSS_348	AY39
BD20	VSS_285	VSS_349	AY41
BD23	VSS_286	VSS_350	AY44
BD25	VSS_287	VSS_351	AY49
BD28	VSS_288	VSS_352	AY52
BD30	VSS_289	VSS_353	AK51
BD32	VSS_290	VSS_354	AW2
BD35	VSS_291	VSS_355	AW3
BD37	VSS_292	VSS_356	AL11
BD40	VSS_293	VSS_357	AW9
BD42	VSS_294	VSS_358	AW12
BD45	VSS_295	VSS_359	AW15
BD49	VSS_296	VSS_360	AW18
BC2	VSS_297	VSS_361	AW20
BC3	VSS_298	VSS_362	AW23
BC57	VSS_299	VSS_363	AW25
BC58	VSS_300	VSS_364	AW28
BB6	VSS_301	VSS_365	AW30
BB9	VSS_302	VSS_366	AW32
BB12	VSS_303	VSS_367	AW35
BB15	VSS_304	VSS_368	AW37
BB18	VSS_305	VSS_369	AW40
BB20	VSS_306	VSS_370	AW42
BB23	VSS_307	VSS_371	AW44
BB25	VSS_308	VSS_372	AW48
BB28	VSS_309	VSS_373	AW51
BB30	VSS_310	VSS_374	AL49
BB32	VSS_311	VSS_375	AW57
BB35	VSS_312	VSS_376	AW58
BB37	VSS_313	VSS_377	AU2
BB40	VSS_314	VSS_378	AU3
BB42	VSS_315	VSS_379	AU11
BB45	VSS_316	VSS_380	AU15
BB48	VSS_317	VSS_381	AU18
BB51	VSS_318	VSS_382	AU20
BB54	VSS_319	VSS_383	AU23
BA2	VSS_320	VSS_384	AU25

X950118-001 BGA2409

U1 — IC

ANUBIS 27 OF 30 GROUND

AU28	VSS_385	VSS_449	AN9
AU30	VSS_386	VSS_450	AN12
AU32	VSS_387	VSS_451	AN48
AU35	VSS_388	VSS_452	AN51
AU37	VSS_389	VSS_453	AN54
AU40	VSS_390	VSS_454	AN57
AU42	VSS_391	VSS_455	AN58
AU49	VSS_392	VSS_456	AM18
AU52	VSS_393	VSS_457	AM20
AU57	VSS_394	VSS_458	AM23
AU58	VSS_395	VSS_459	AM25
AT9	VSS_396	VSS_460	AM28
AT12	VSS_397	VSS_461	AM30
AT16	VSS_398	VSS_462	AM32
AT19	VSS_399	VSS_463	AM35
AT21	VSS_400	VSS_464	AM37
AT24	VSS_401	VSS_465	AM40
AT26	VSS_402	VSS_466	AM42
AT29	VSS_403	VSS_467	AL2
AT31	VSS_404	VSS_468	AL3
AT34	VSS_405	VSS_469	AL8
AT36	VSS_406	VSS_470	AL15
AT39	VSS_407	VSS_471	AL16
AT41	VSS_408	VSS_472	AL19
AT44	VSS_409	VSS_473	AL21
AT45	VSS_410	VSS_474	AL24
AT48	VSS_411	VSS_475	AL26
AR2	VSS_412	VSS_476	AL29
AR3	VSS_413	VSS_477	AL31
AR16	VSS_414	VSS_478	AL34
AR19	VSS_415	VSS_479	AL36
AR21	VSS_416	VSS_480	AL39
AR24	VSS_417	VSS_481	AL41
AR26	VSS_418	VSS_482	AL44
AR29	VSS_419	VSS_483	AL45
AR31	VSS_420	VSS_484	AL52
AR34	VSS_421	VSS_485	AL57
AR36	VSS_422	VSS_486	AL58
AR39	VSS_423	VSS_487	AK12
AR41	VSS_424	VSS_488	AK19
AR57	VSS_425	VSS_489	AK21
AR58	VSS_426	VSS_490	AK24
AP5	VSS_427	VSS_491	AK26
AP8	VSS_428	VSS_492	AK29
AP11	VSS_429	VSS_493	AK31
AP16	VSS_430	VSS_494	AK34
AP18	VSS_431	VSS_495	AK36
AP20	VSS_432	VSS_496	AK39
AP23	VSS_433	VSS_497	AK41
AP25	VSS_434	VSS_498	AK48
AP28	VSS_435	VSS_499	AJ2
AP30	VSS_436	VSS_500	AJ3
AP32	VSS_437	VSS_501	AJ11
AP35	VSS_438	VSS_502	AJ16
AP37	VSS_439	VSS_503	AJ18
AP40	VSS_440	VSS_504	AJ20
AP42	VSS_441	VSS_505	AJ23
AP44	VSS_442	VSS_506	AJ25
AP49	VSS_443	VSS_507	AJ28
AP52	VSS_444	VSS_508	AJ30
AP55	VSS_445	VSS_509	AJ32
AN2	VSS_446	VSS_510	AJ35
AN3	VSS_447	VSS_511	AJ37
AN6	VSS_448	VSS_512	AJ40

X950118-001 BGA2409

SOC: POWER: VSS

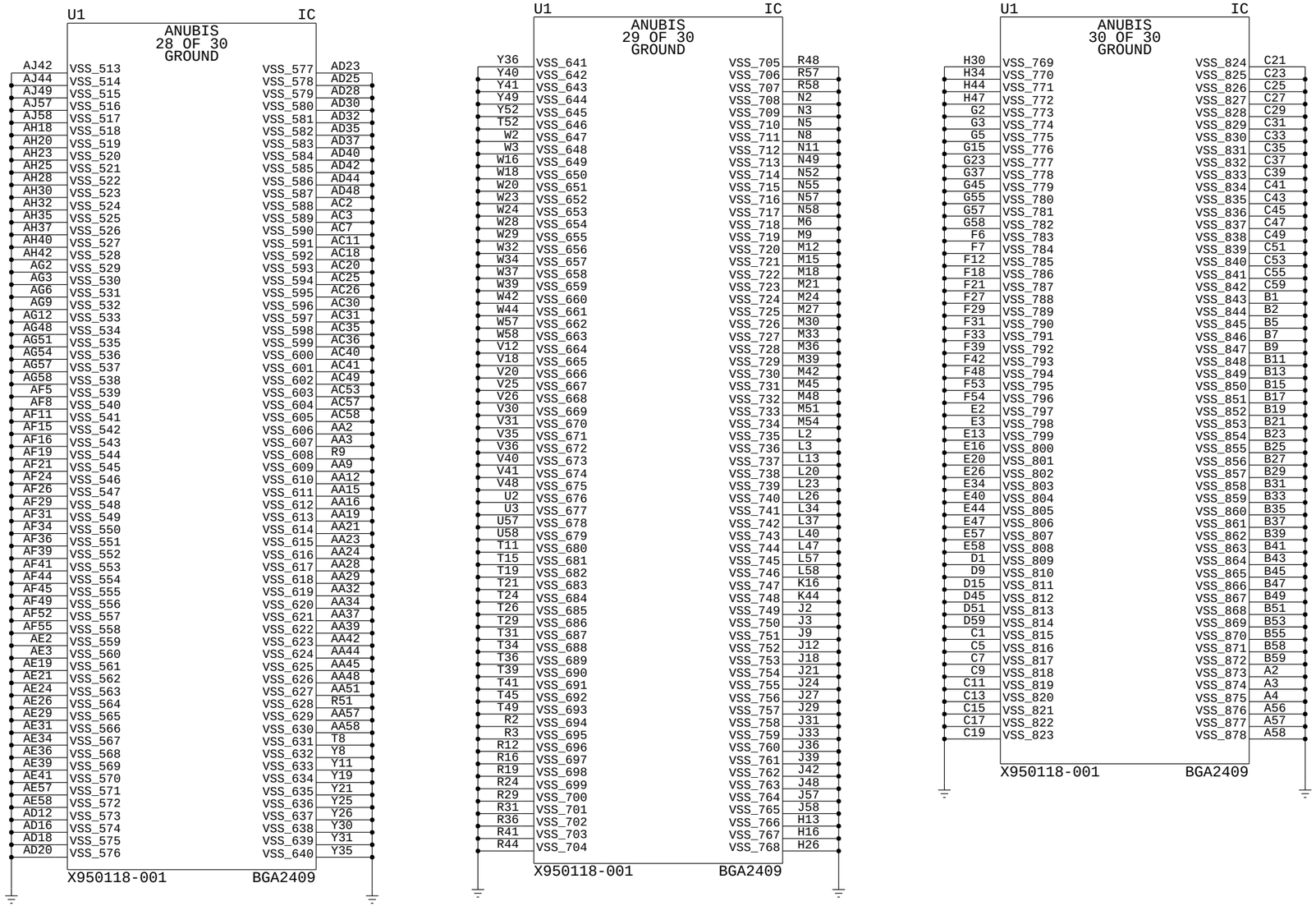

MICROSOFT CONFIDENTIAL	PROJECT NAME	PAGE	CSA PAGE	FAB	VER
	Cactus	7/82	7/82	G-R	0.991

MEMORY: PARTITION F1/F0

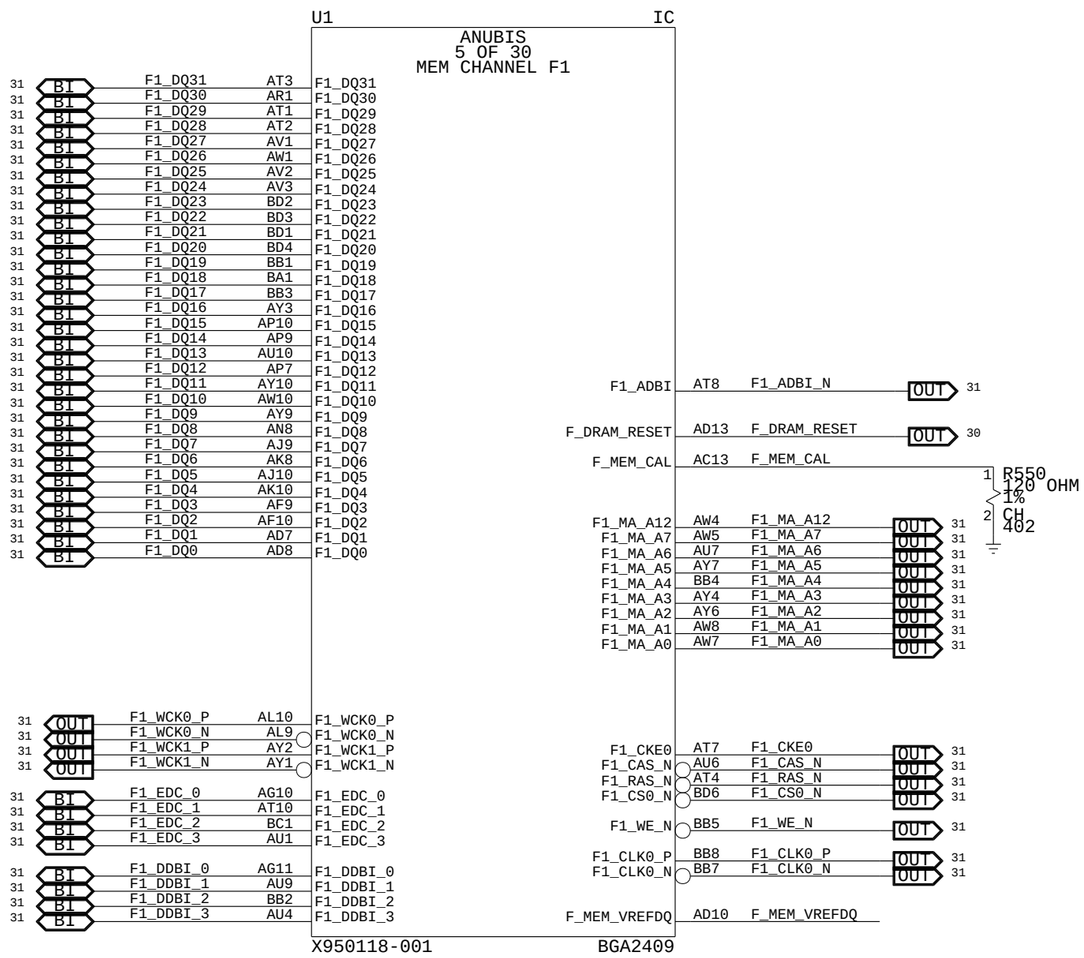

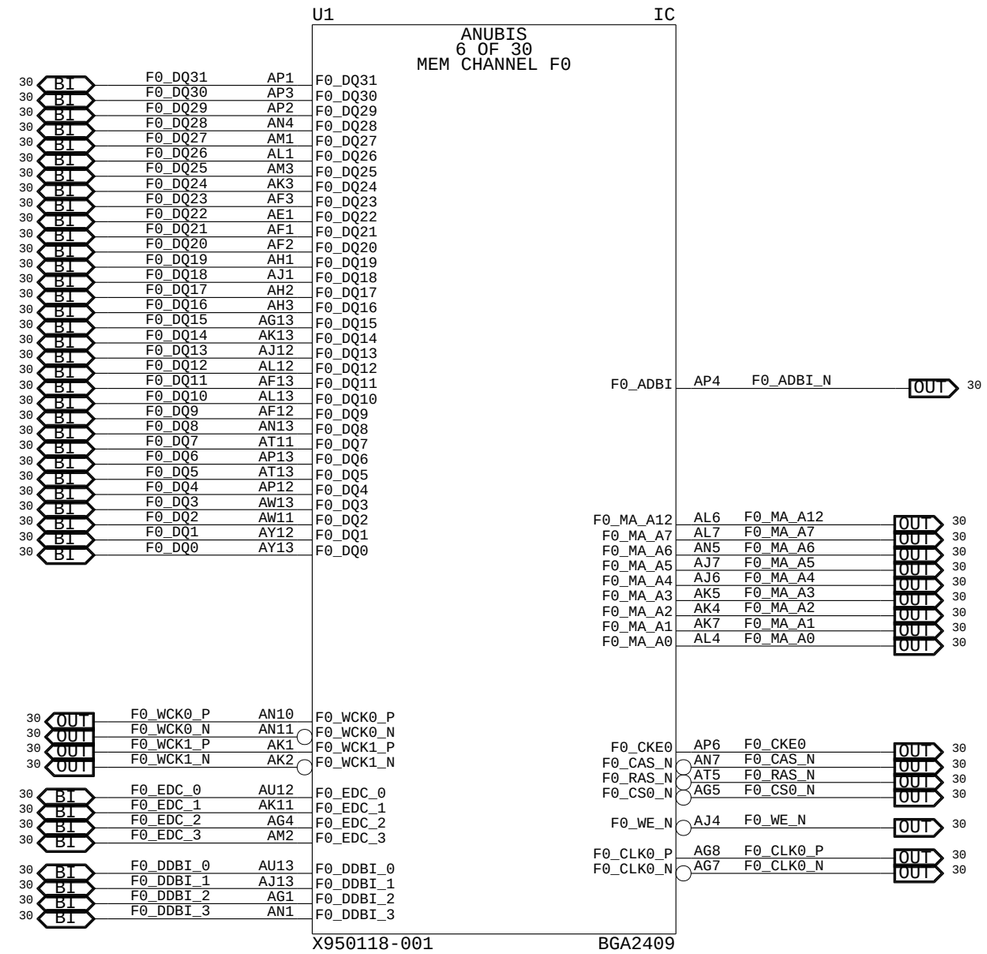

MICROSOFT CONFIDENTIAL	PROJECT NAME	PAGE	CSA PAGE	FAB	VER
	Cactus	8/82	8/82	G-R	0.991

MEMORY: PARTITION E1/E0

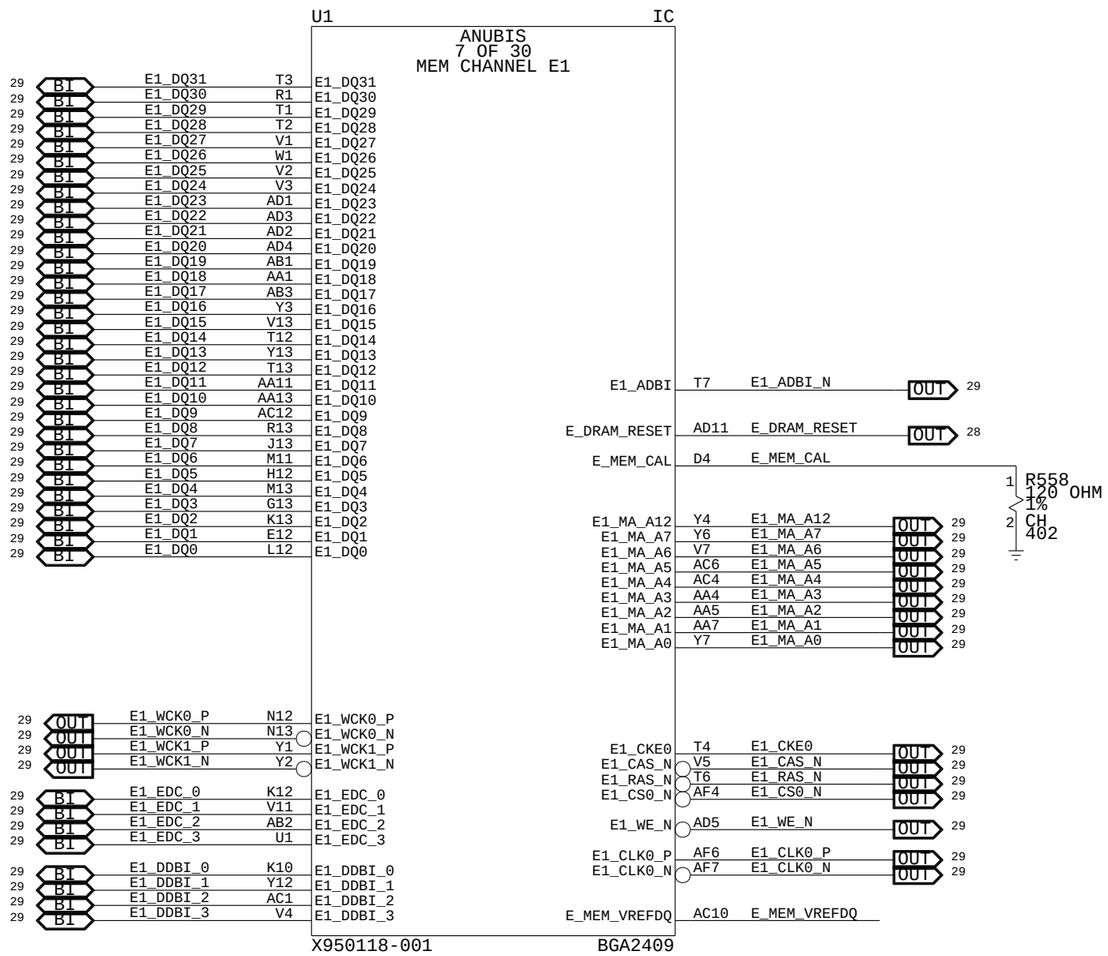

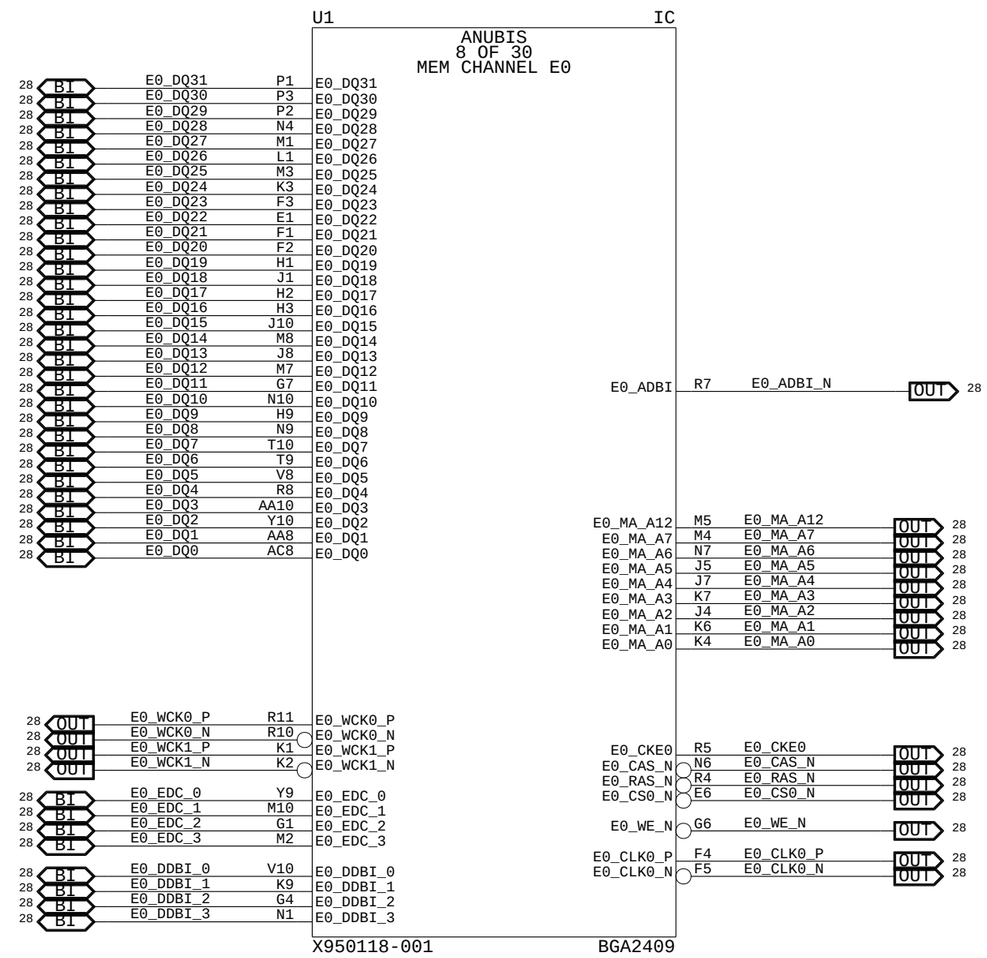

MICROSOFT CONFIDENTIAL	PROJECT NAME	PAGE	CSA PAGE	FAB	VER
	Cactus	9/82	9/82	G-R	0.991

MEMORY: PARTITION D1/D0

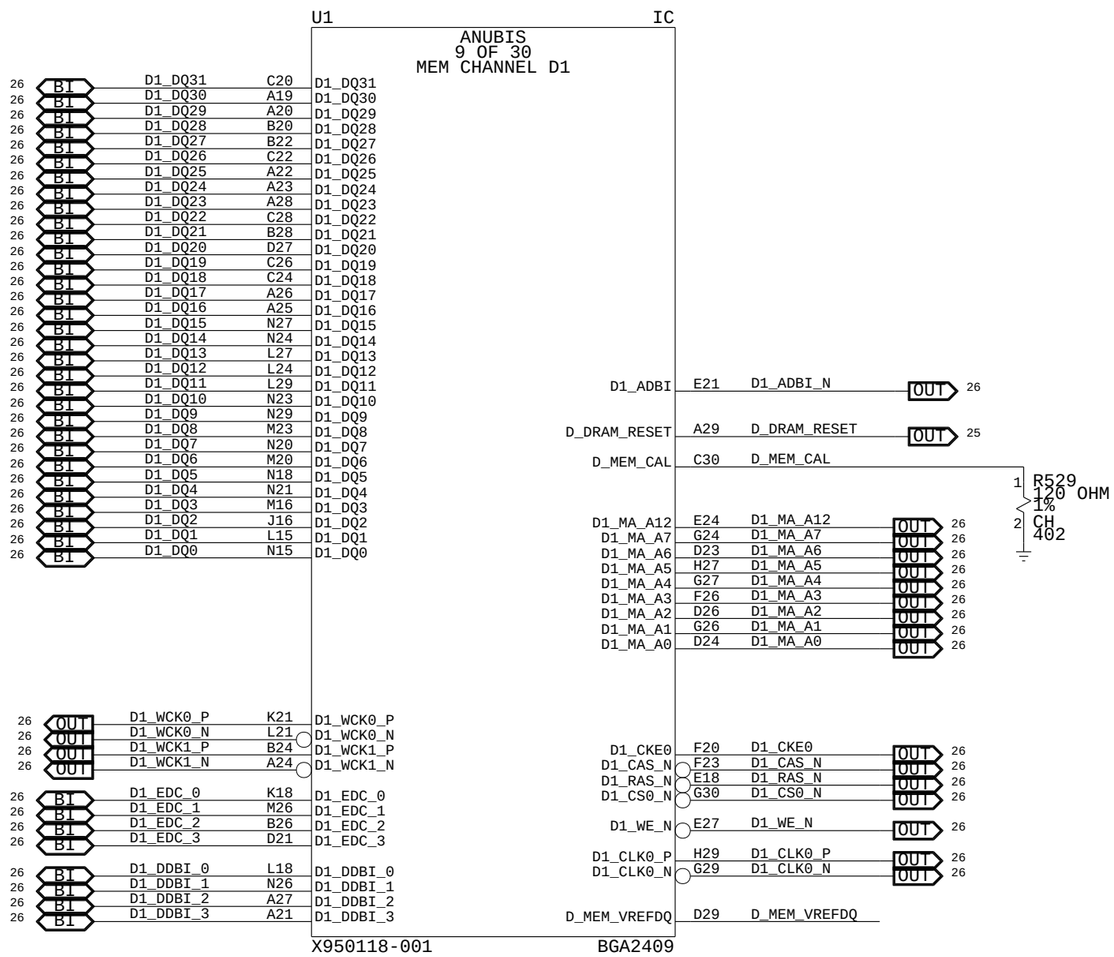

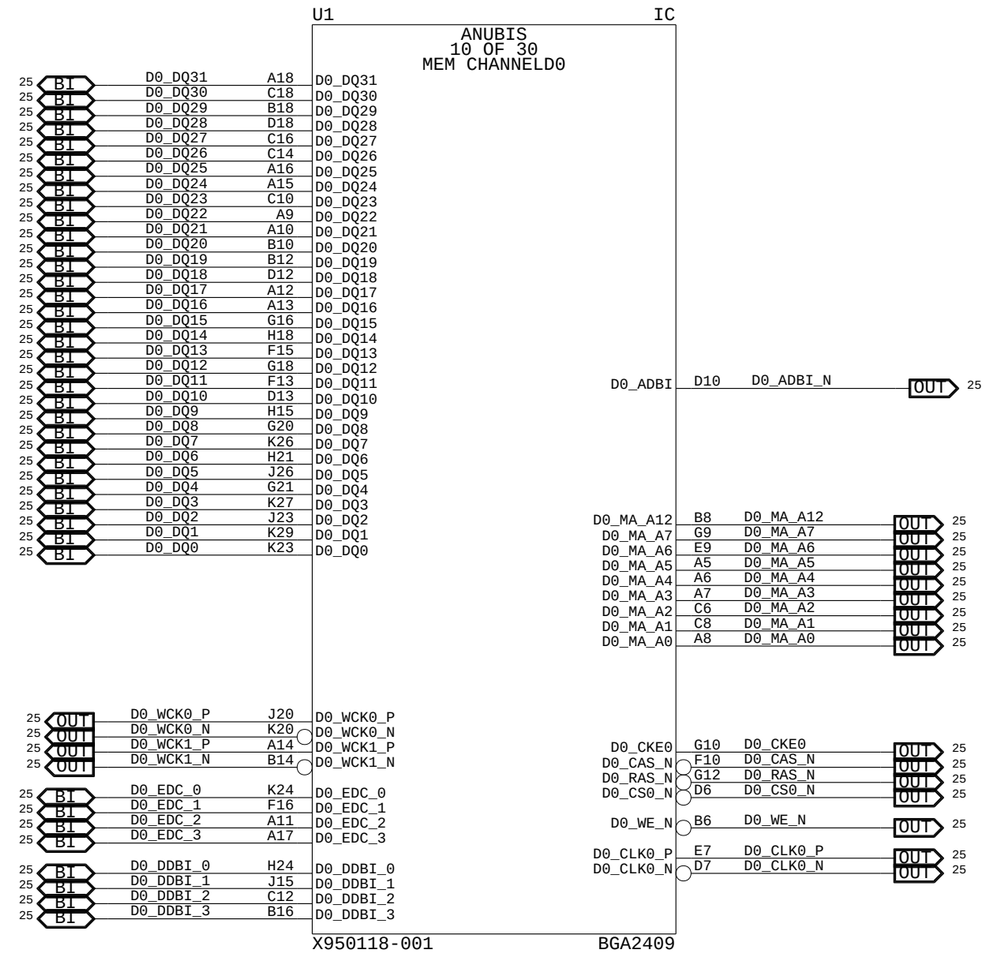

MICROSOFT CONFIDENTIAL	PROJECT NAME	PAGE	CSA PAGE	FAB	VER
	Cactus	10/82	10/82	G-R	0.991

MEMORY: PARTITION C1/C0

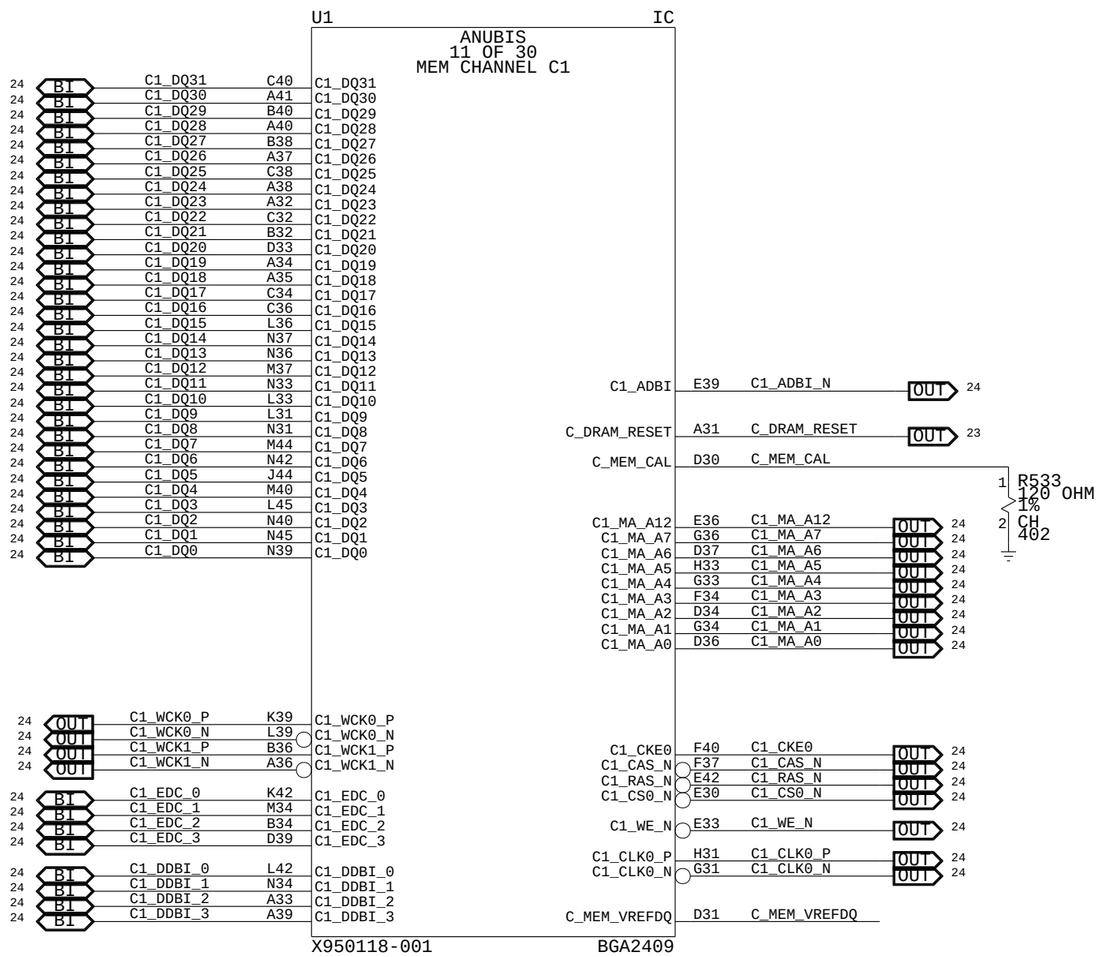

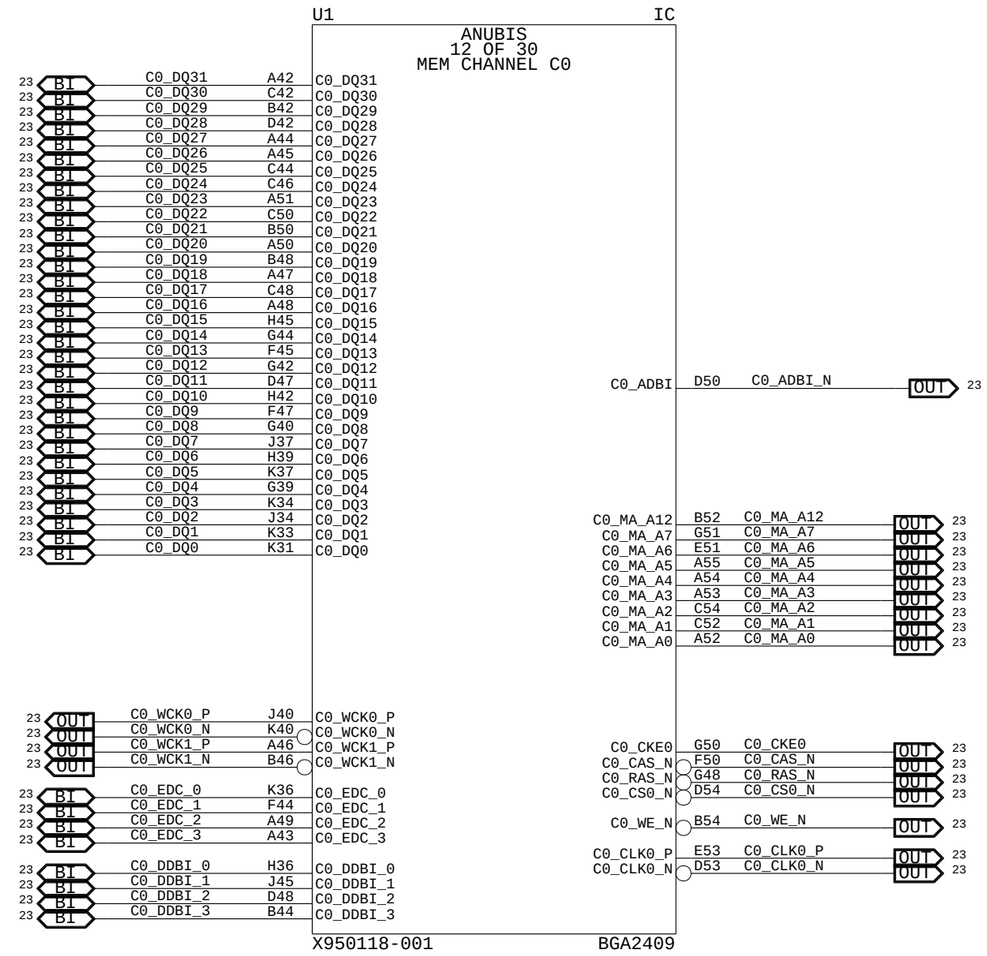

MICROSOFT CONFIDENTIAL	PROJECT NAME	PAGE	CSA PAGE	FAB	VER
	Cactus	11/82	11/82	G-R	0.991

MEMORY: PARTITION B1/B0

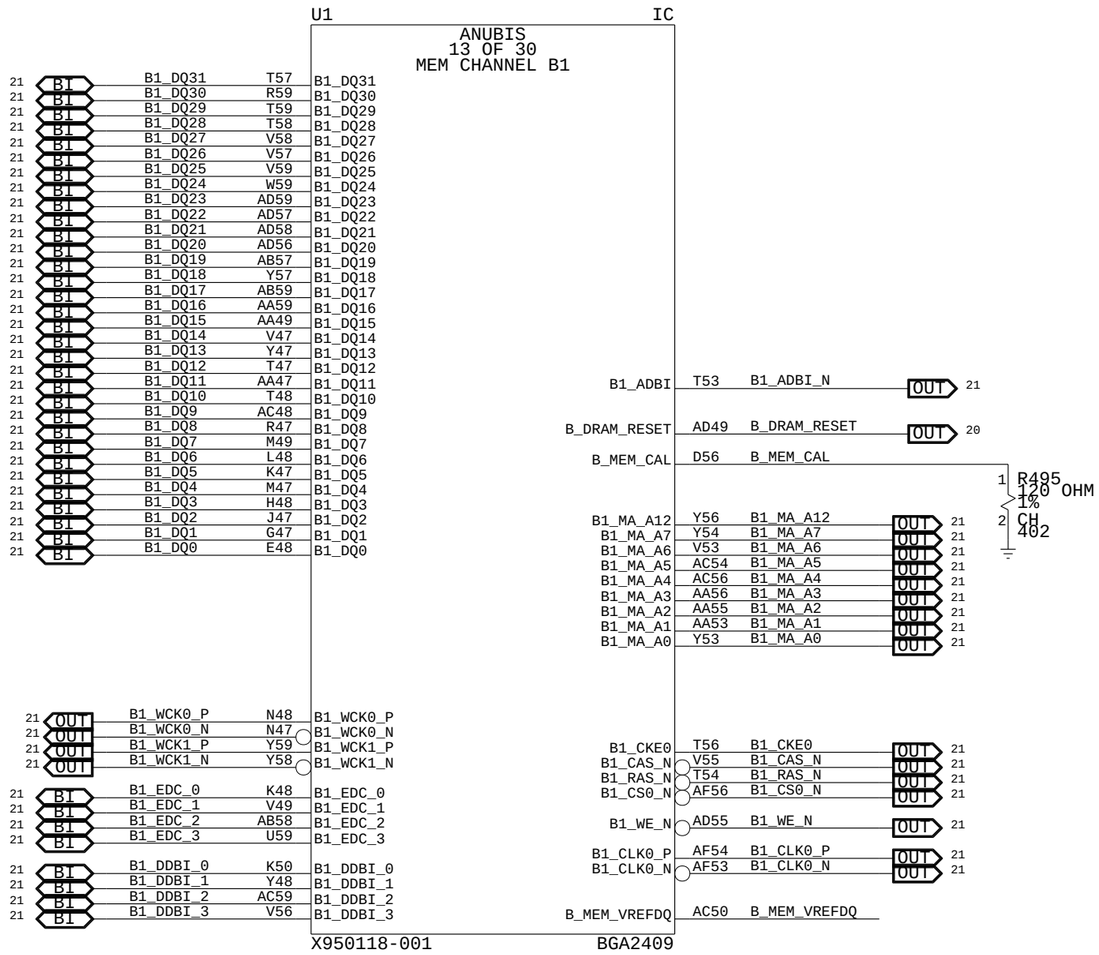

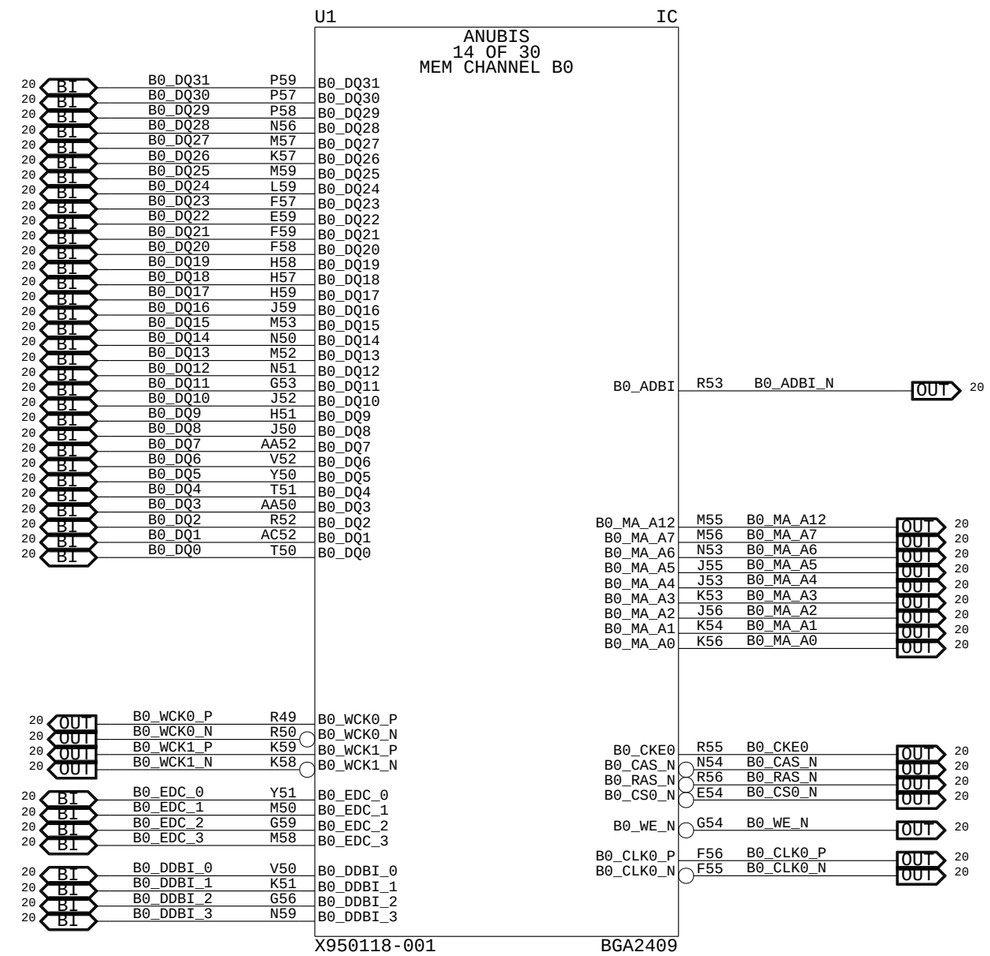

MICROSOFT CONFIDENTIAL	PROJECT NAME	PAGE	CSA PAGE	FAB	VER
	Cactus	12/82	12/82	G-R	0.991

MEMORY: PARTITION A1/A0

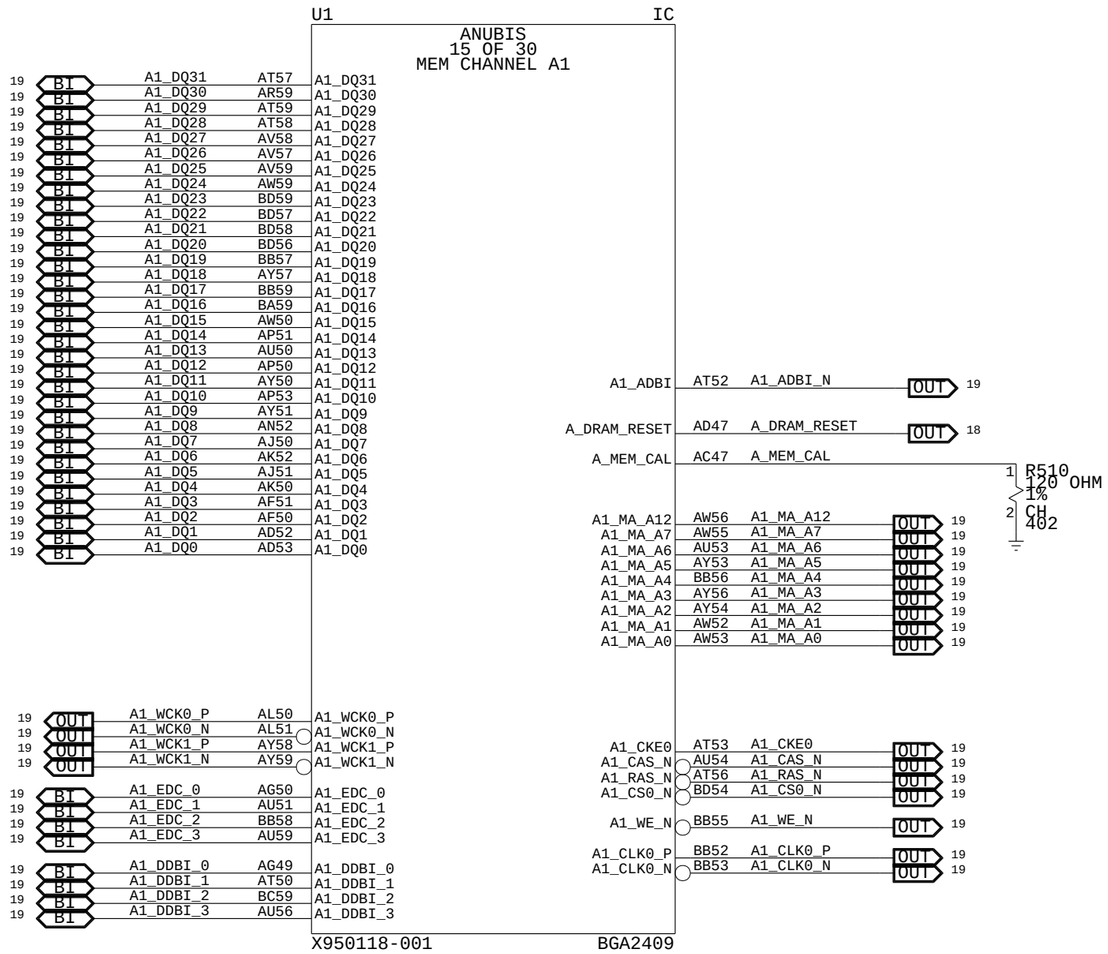

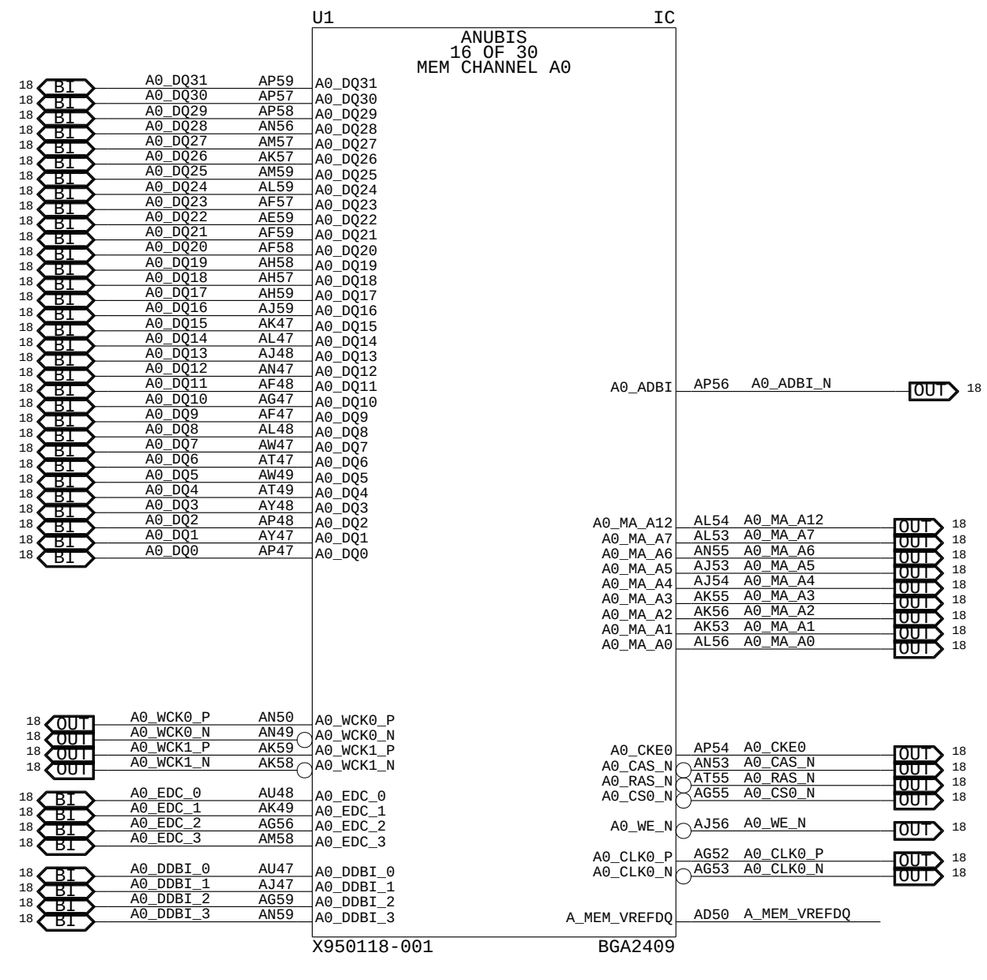

MICROSOFT CONFIDENTIAL	PROJECT NAME	PAGE	CSA PAGE	FAB	VER
	Cactus	13/82	13/82	G-R	0.99

SOC:DEBUG,SB SIGNALS,V_BAT

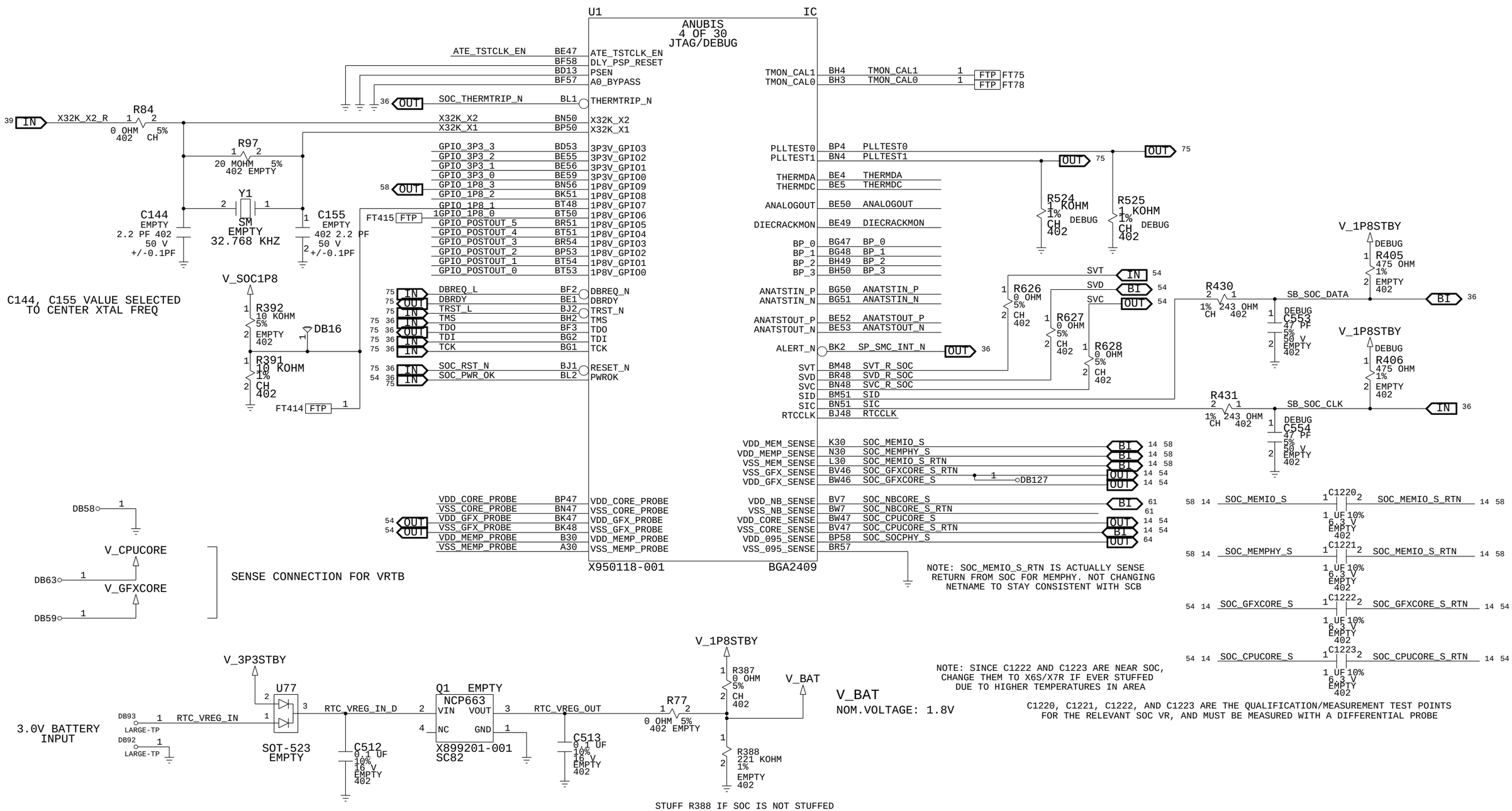

MICROSOFT CONFIDENTIAL	PROJECT NAME	PAGE	CSA PAGE	FAB	VER
	Cactus	14/82	14/82	G-R	0.991

SOC: DECOUPLING

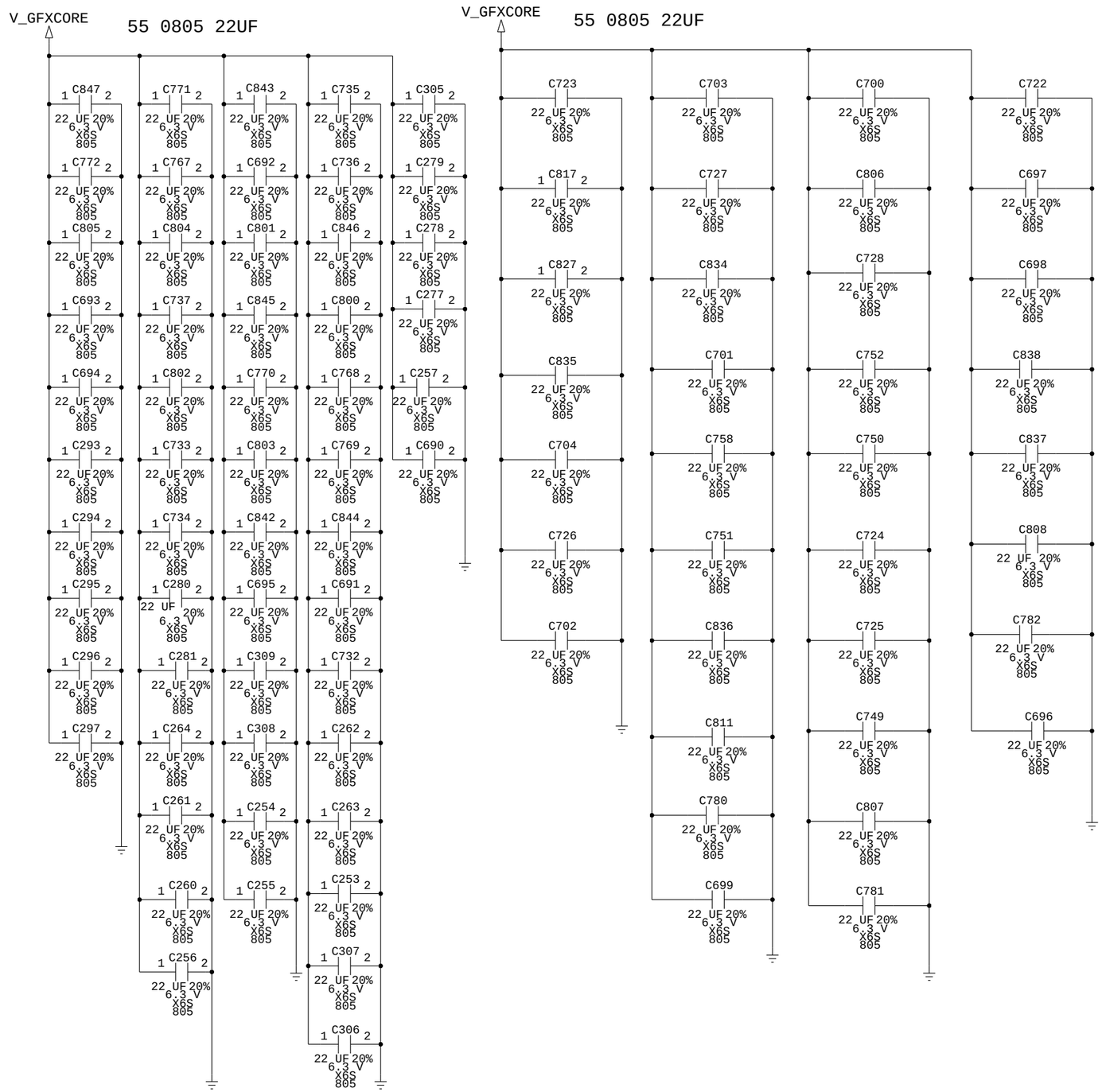

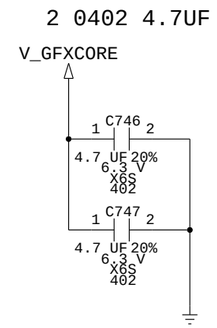

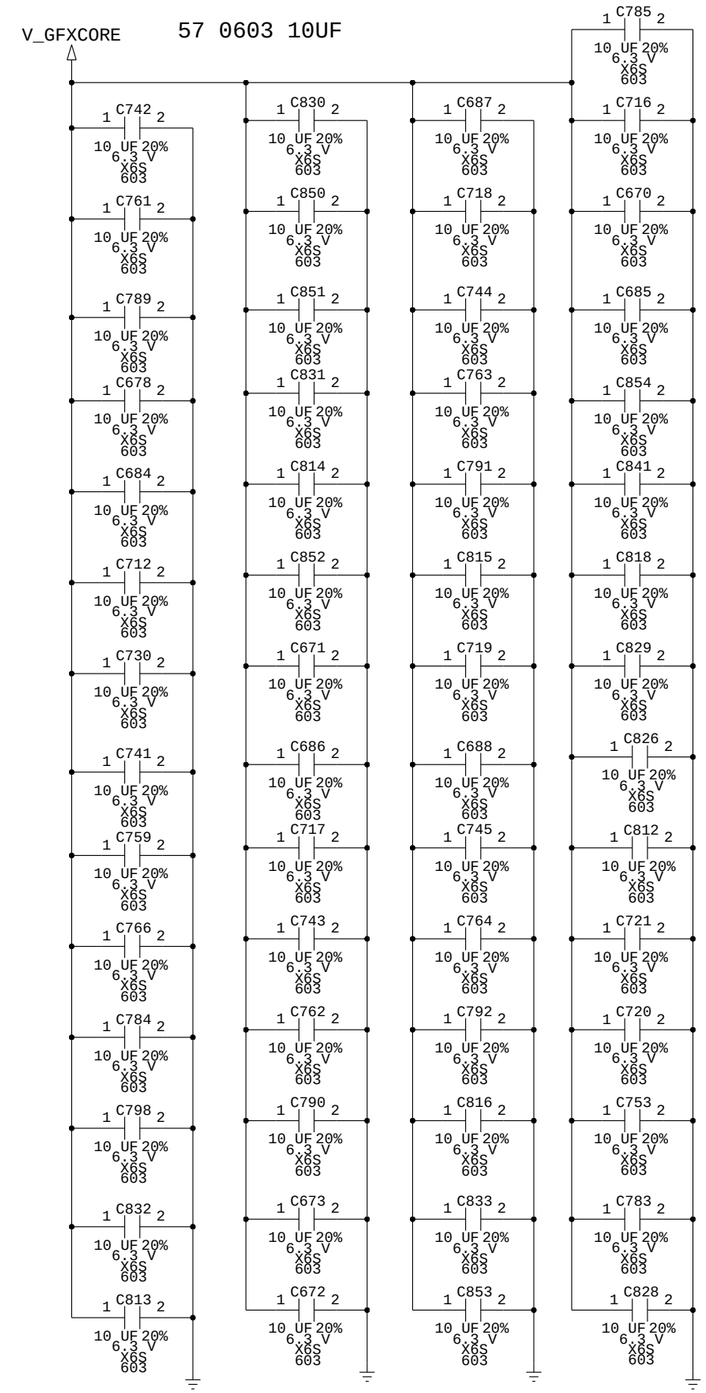

NOTE: X6S/X7R CAPACITORS USED NEAR SOC
DUE TO HIGHER TEMPERATURES IN AREA

MICROSOFT CONFIDENTIAL	PROJECT NAME	PAGE	CSA PAGE	FAB	VER
	Cactus	15/82	15/82	G-R	0.991

SOC: DECOUPLING

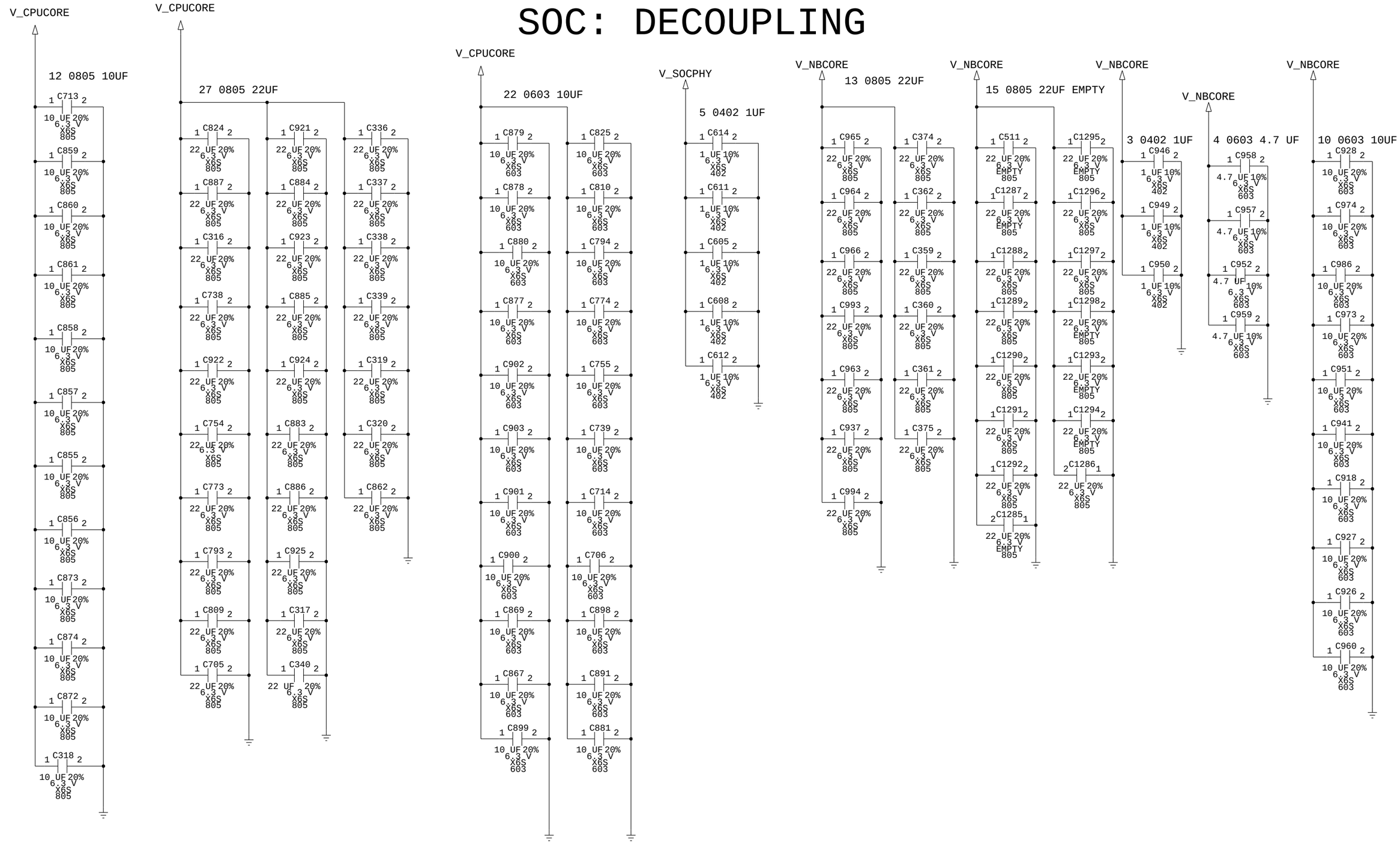

NOTE: X6S/X7R CAPACITORS USED NEAR SOC
DUE TO HIGHER TEMPERATURES IN AREA

MICROSOFT CONFIDENTIAL	PROJECT NAME	PAGE	CSA PAGE	FAB	VER
	Cactus	16/82	16/82	G-R	0.99

SOC: DECOUPLING

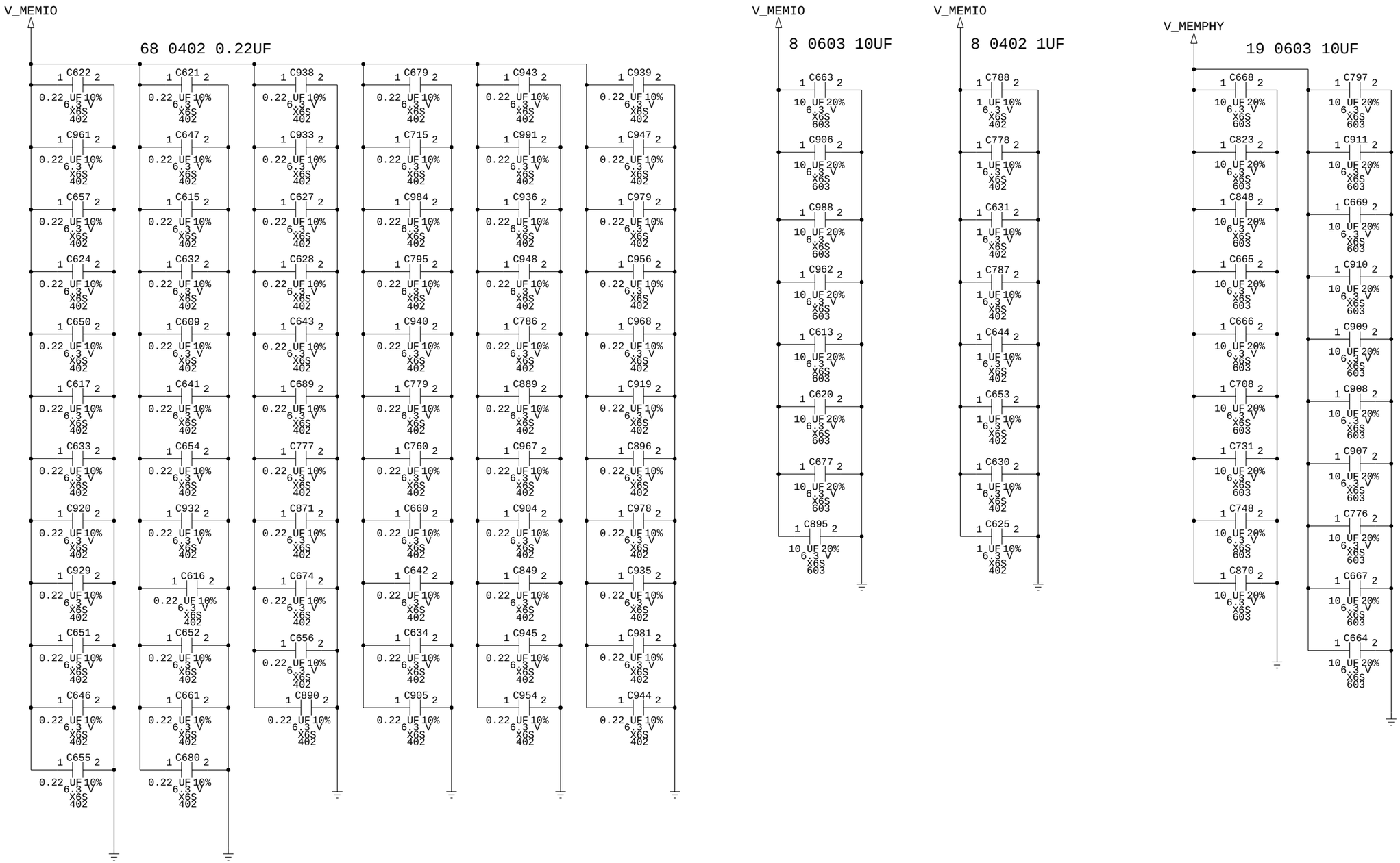

NOTE: X6S/X7R CAPACITORS USED NEAR SOC
DUE TO HIGHER TEMPERATURES IN AREA

MICROSOFT CONFIDENTIAL	PROJECT NAME	PAGE	CSA PAGE	FAB	VER
	Cactus	17/82	17/82	G-R	0.991

MEMORY: CHANNEL A0

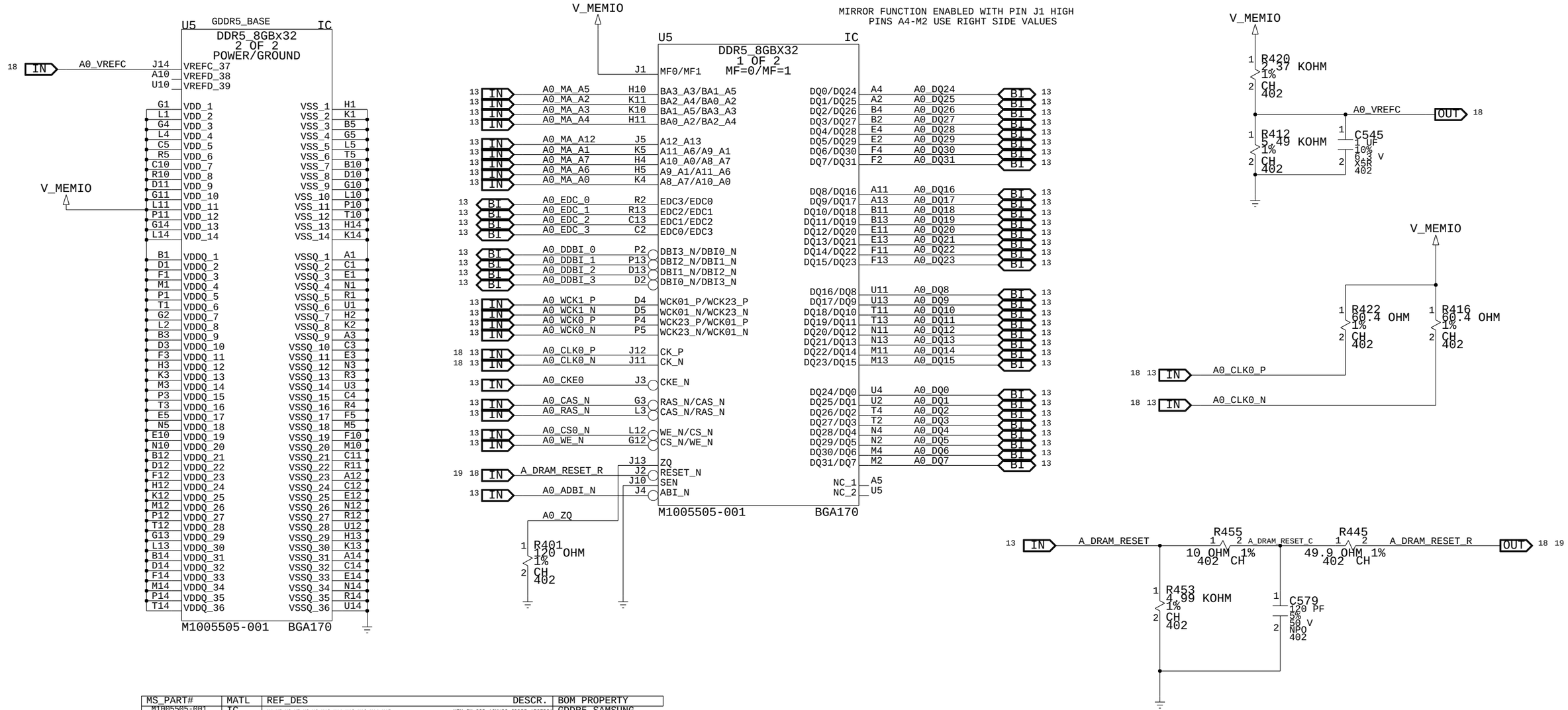

MS_PART#	MATL	REF_DES	DESCR.	BOM PROPERTY
M1005505-001	IC	U4,U5,U6,U7,U8,U9,U10,U11,U12,U13,U14,U15	MEM,SM,8GB,16MX32,GDDR5,170FBGA	GDDR5_SAMSUNG
M1005717-001	IC	U4,U5,U6,U7,U8,U9,U10,U11,U12,U13,U14,U15	MEM,SM,8GB,16MX32,GDDR5,170FBGA	GDDR5_HYNIX

MICROSOFT CONFIDENTIAL	PROJECT NAME	PAGE	CSA PAGE	FAB	VER
	Cactus	18/82	18/82	G-R	0.991

MEMORY: CHANNEL A1

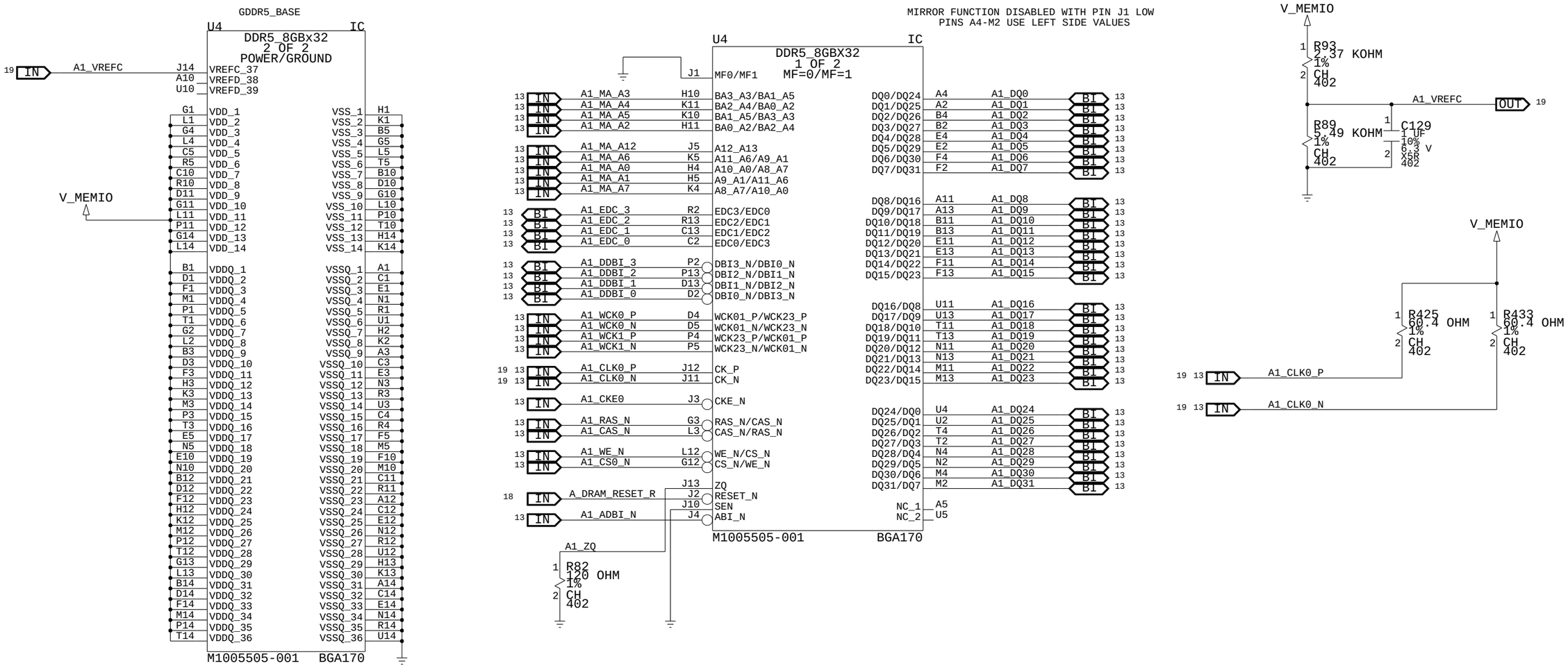

MICROSOFT CONFIDENTIAL	PROJECT NAME	PAGE	CSA PAGE	FAB	VER
	Cactus	19/82	19/82	G-R	0.991

MEMORY: CHANNEL B0

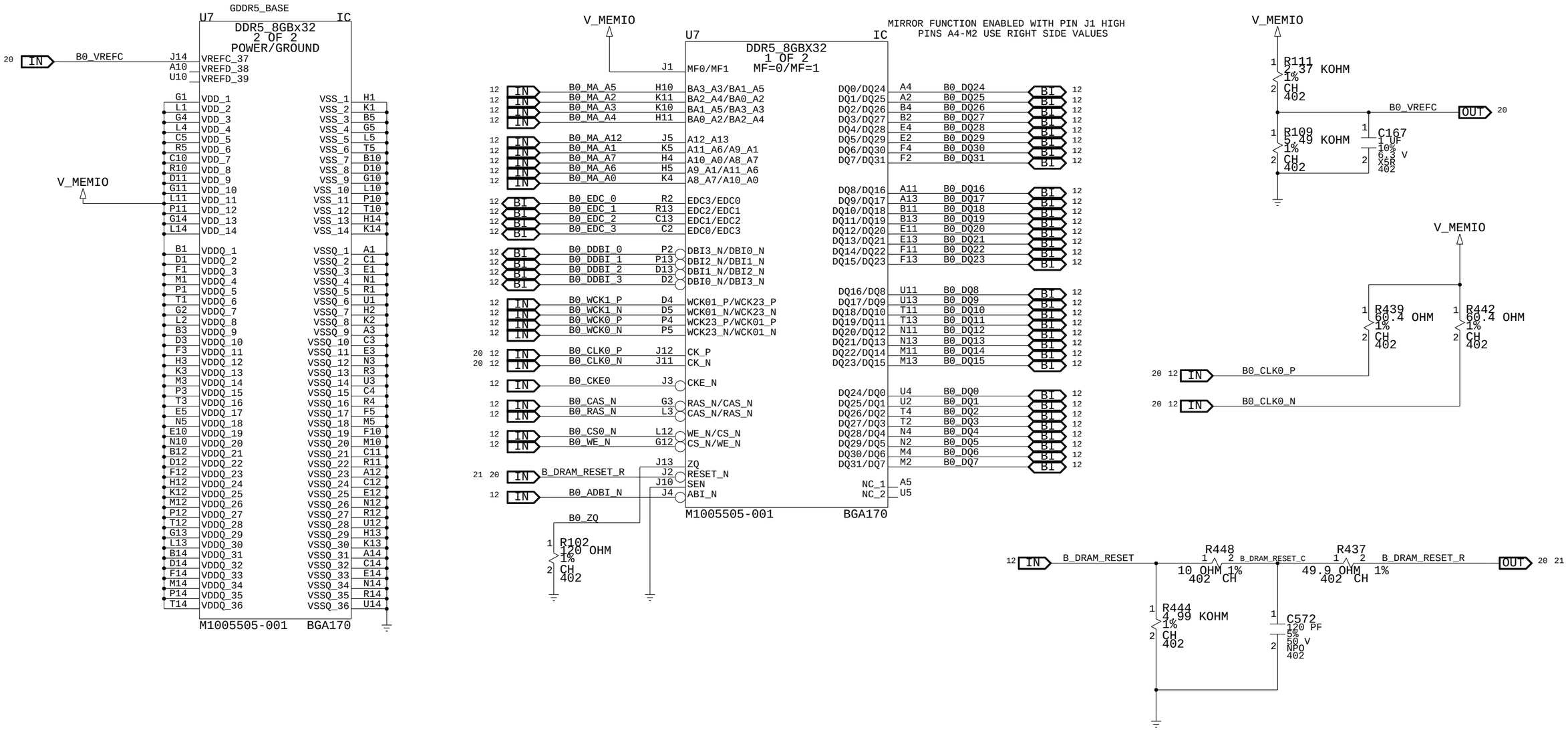

MICROSOFT CONFIDENTIAL	PROJECT NAME	PAGE	CSA PAGE	FAB	VER
	Cactus	20/82	20/82	G-R	0.991

MEMORY: CHANNEL B1

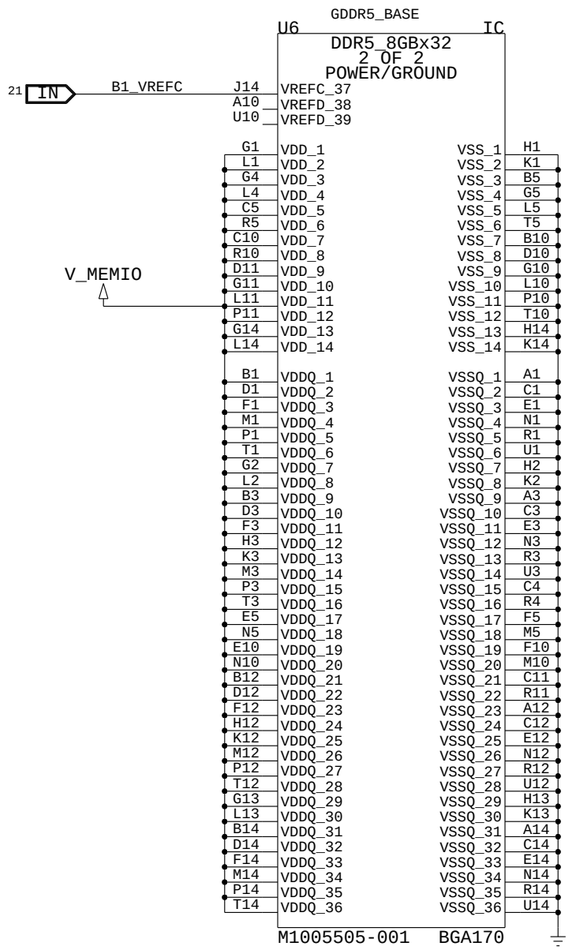

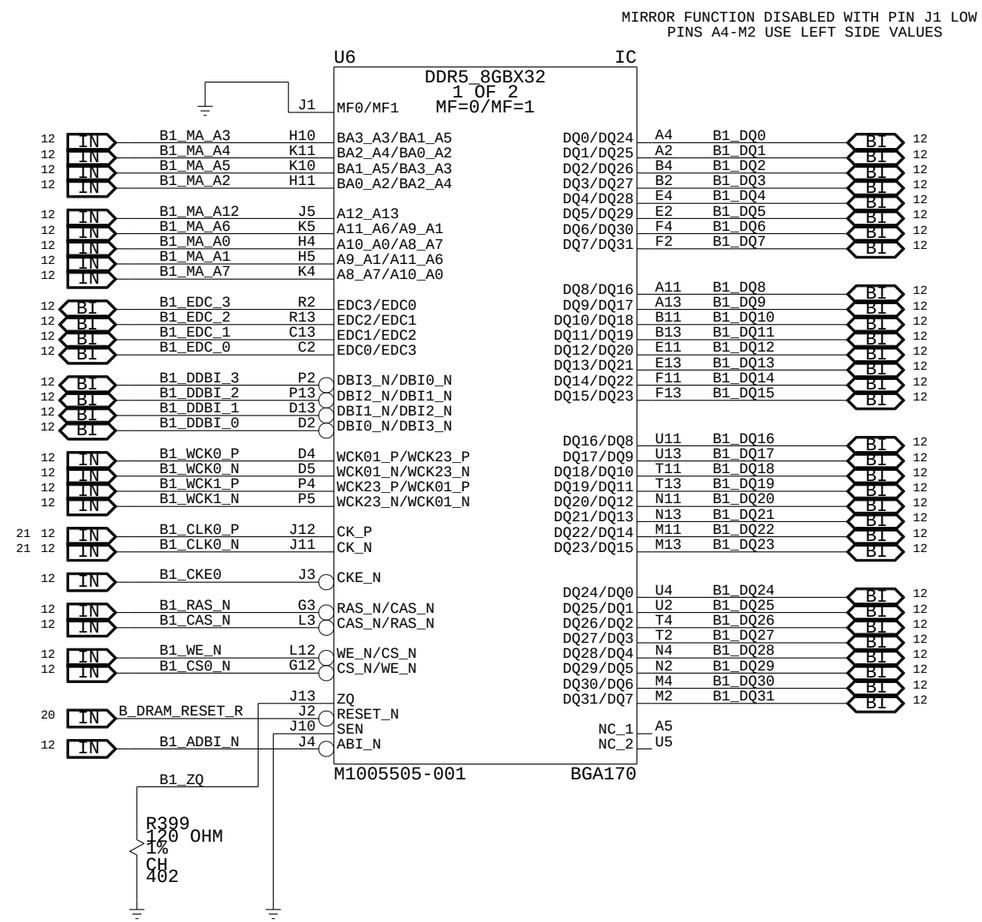

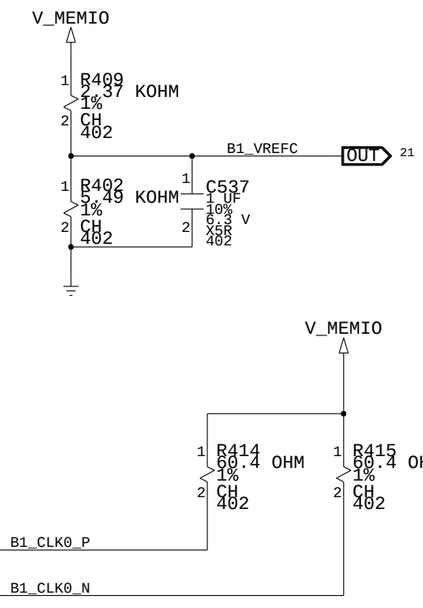

MICROSOFT CONFIDENTIAL	PROJECT NAME	PAGE	CSA PAGE	FAB	VER
	Cactus	21/82	21/82	G-R	0.991

MEMORY: CHANNEL A/B DECOUPLING

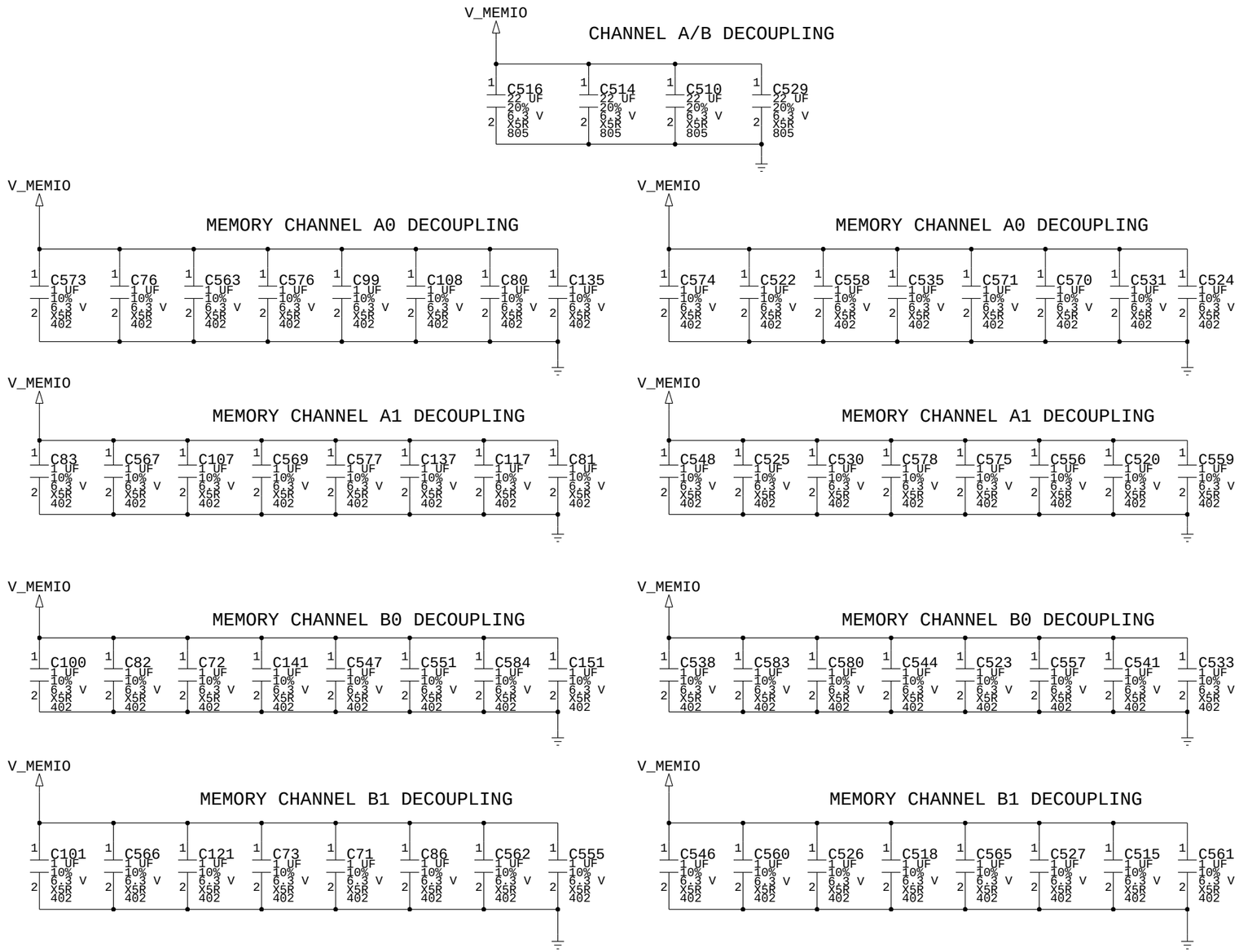

NOTE: ADDITIONAL MEMORY DECOUPLING ON PAGE 33

MEMORY: CHANNEL C0

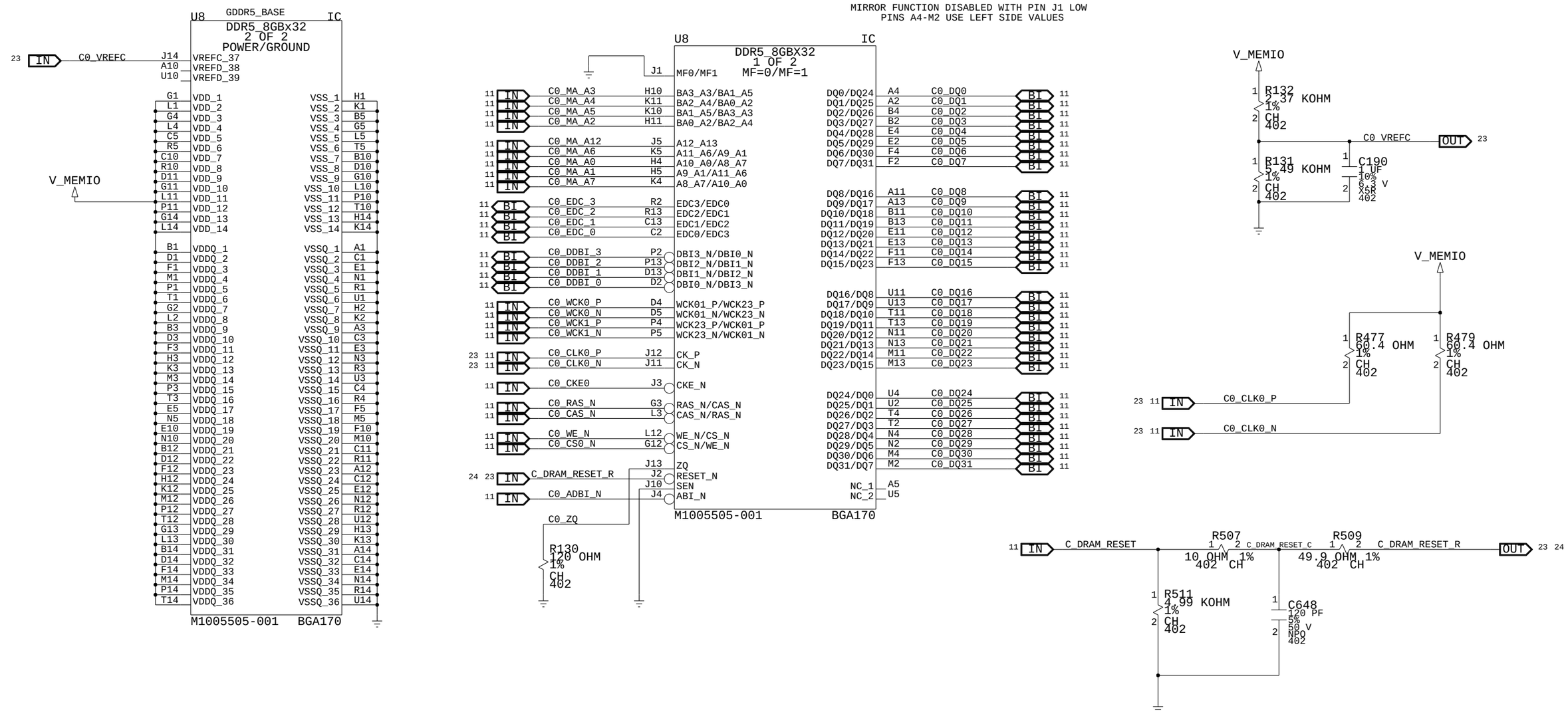

MICROSOFT CONFIDENTIAL	PROJECT NAME	PAGE	CSA PAGE	FAB	VER
	Cactus	23/82	23/82	G-R	0.991

MEMORY: CHANNEL C1

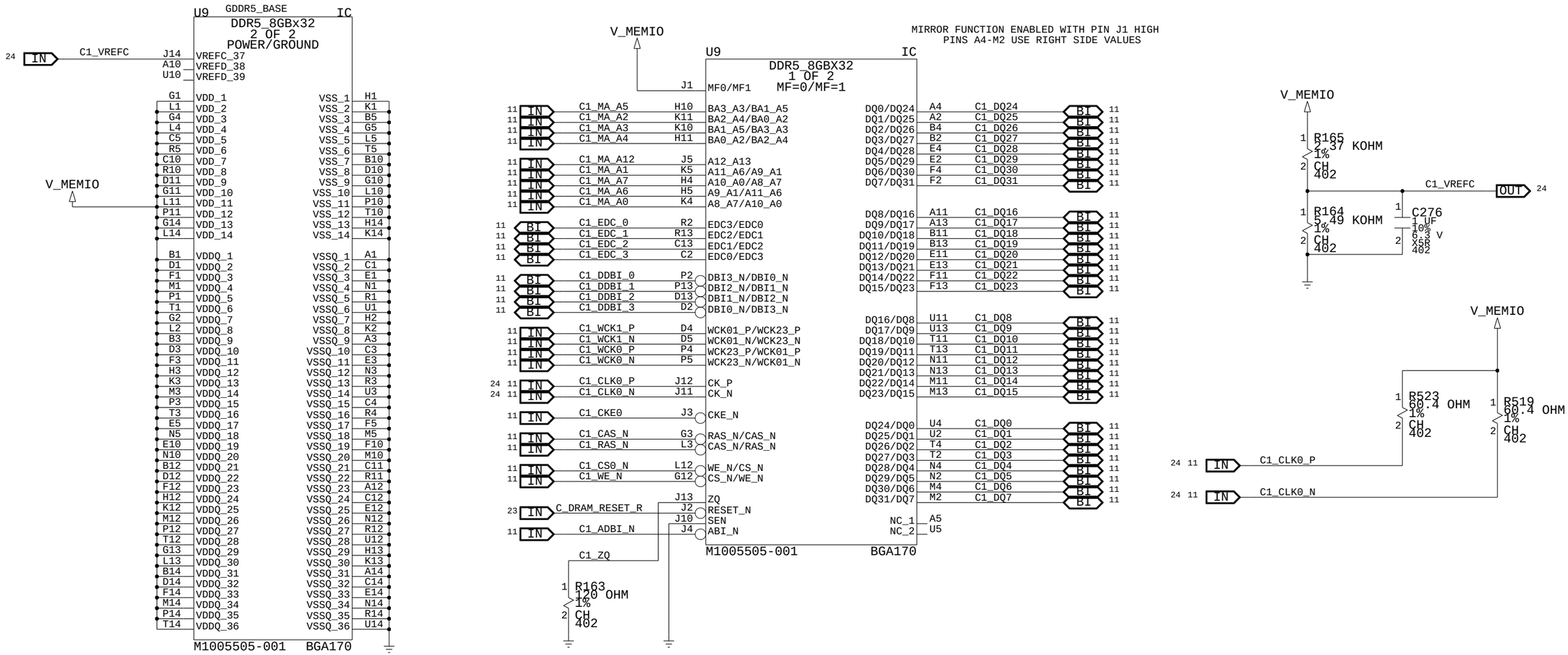

MICROSOFT CONFIDENTIAL	PROJECT NAME	PAGE	CSA PAGE	FAB	VER
	Cactus	24/82	24/82	G-R	0.991

MEMORY: CHANNEL D0

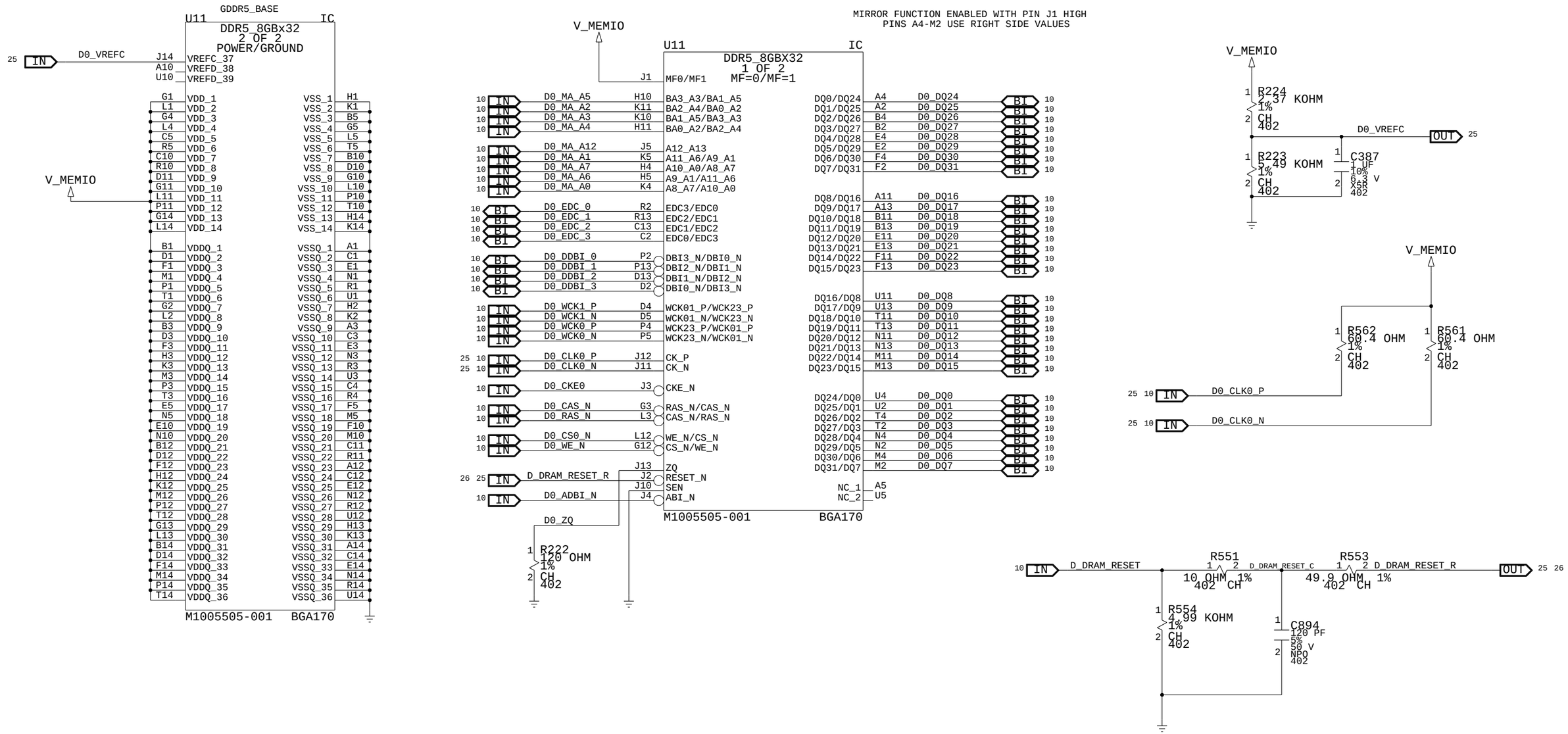

MICROSOFT CONFIDENTIAL	PROJECT NAME	PAGE	CSA PAGE	FAB	VER
	Cactus	25/82	25/82	G-R	0.991

MEMORY: CHANNEL D1

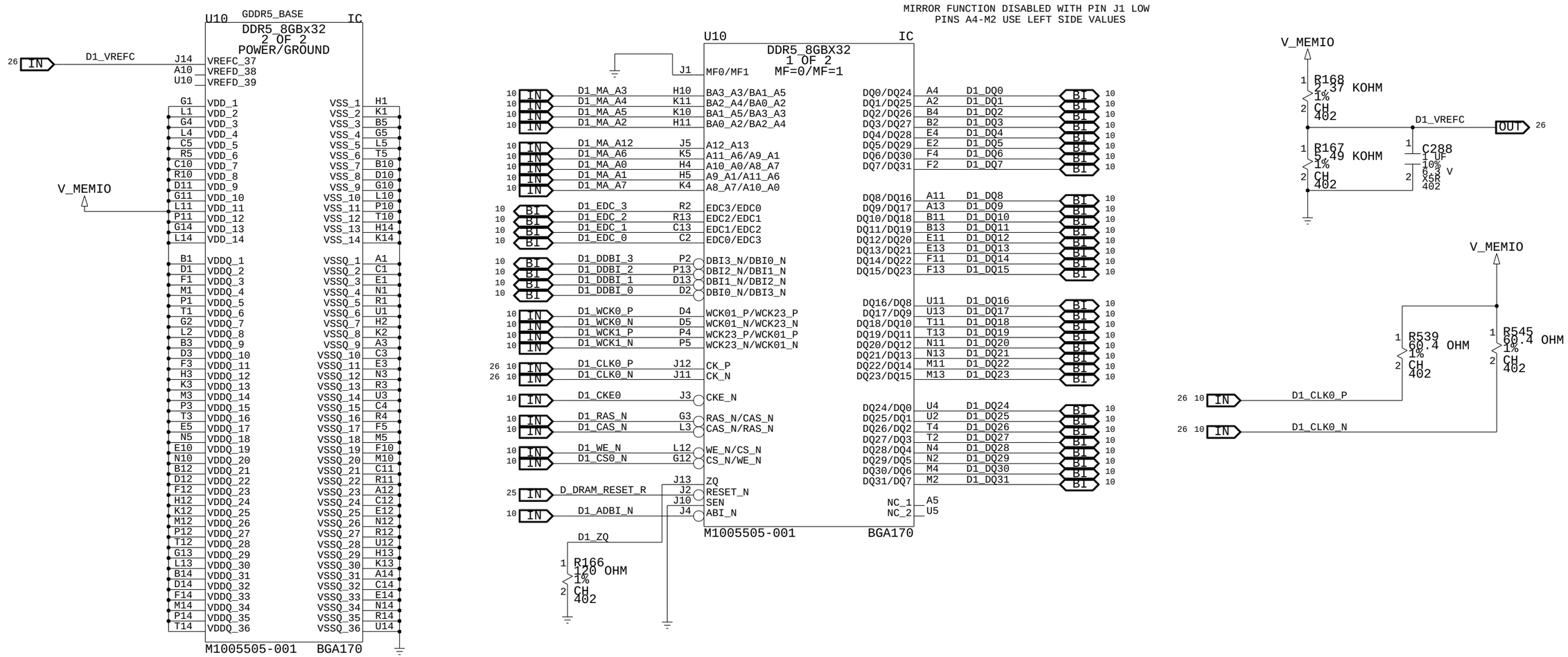

MICROSOFT CONFIDENTIAL	PROJECT NAME	PAGE	CSA PAGE	FAB	VER
	Cactus	26/82	26/82	G-R	0.991

MEMORY: CHANNEL C/D DECOUPLING

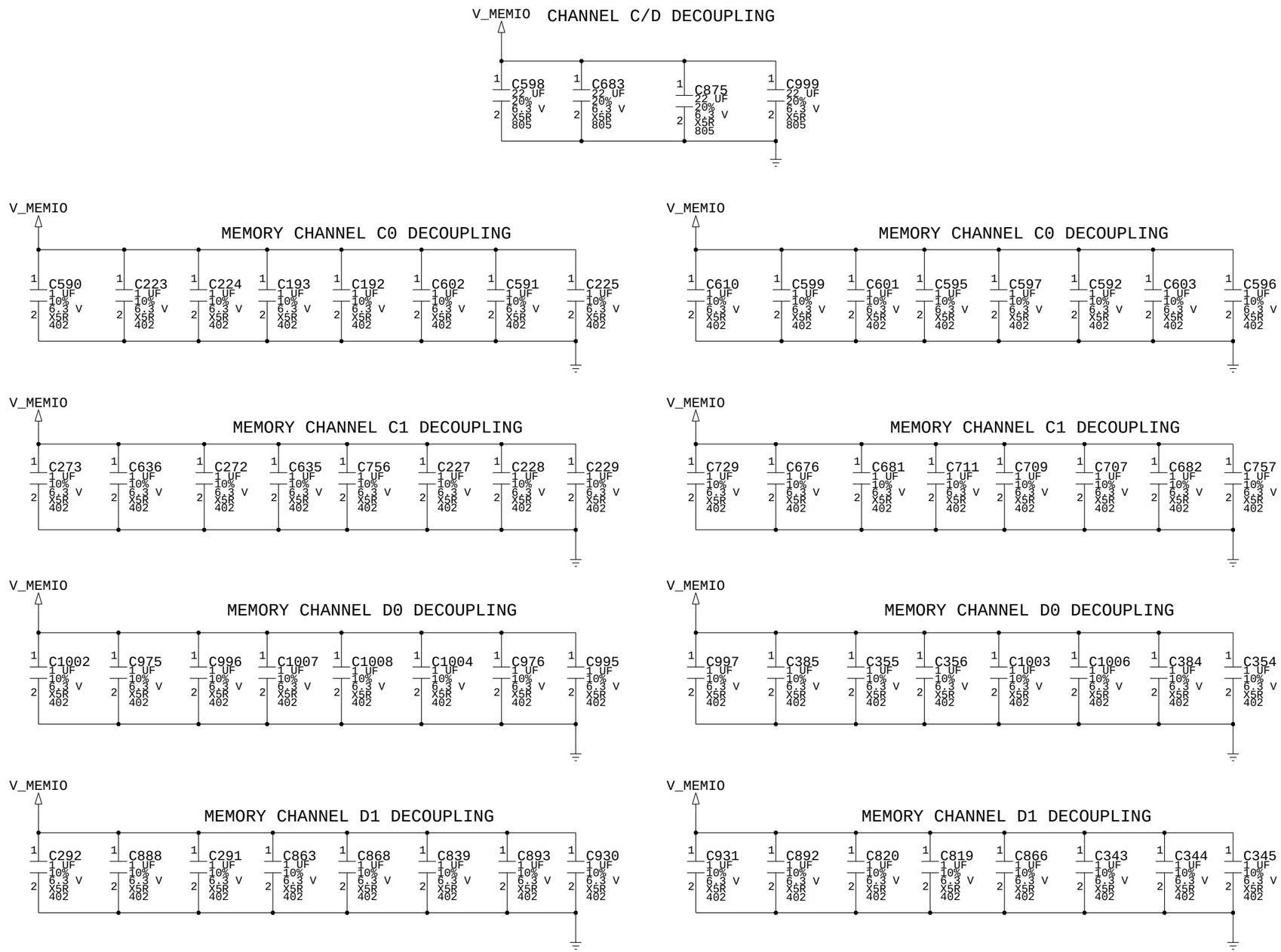

NOTE: ADDITIONAL MEMORY DECOUPLING ON PAGE 33

MEMORY: CHANNEL E0

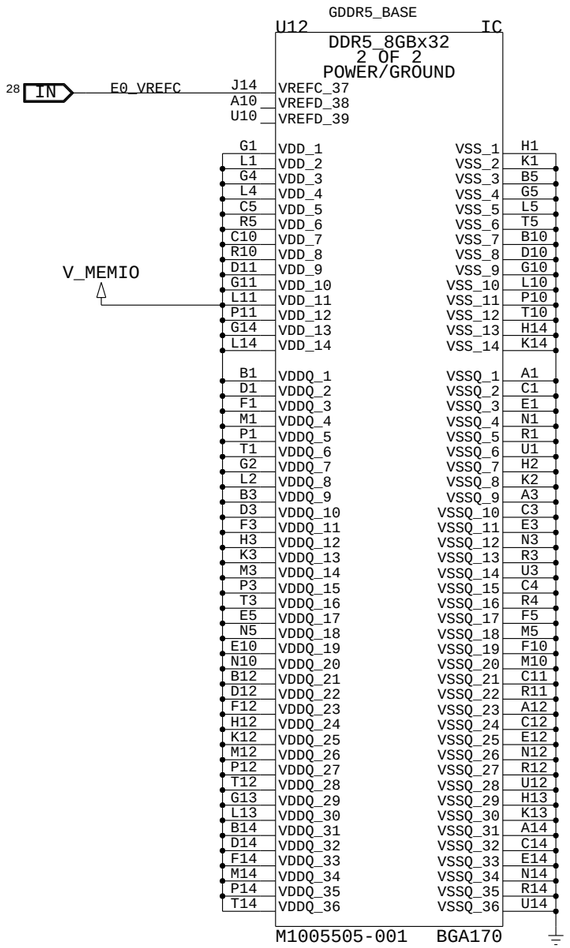

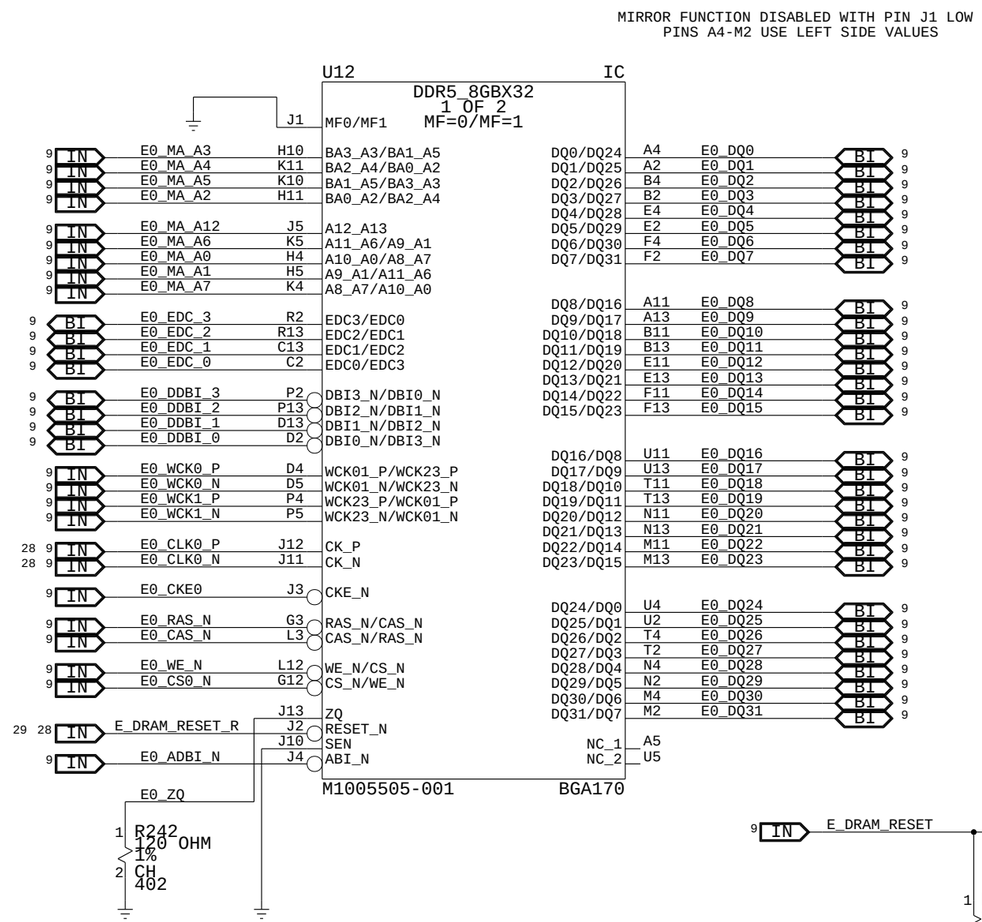

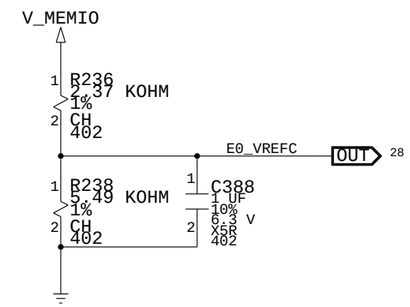

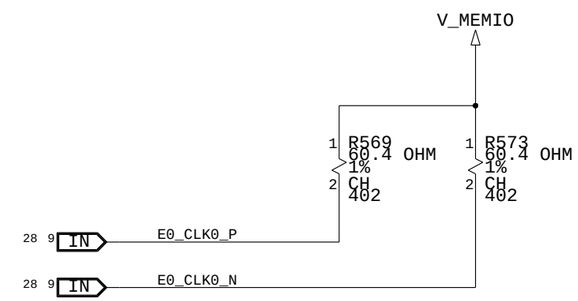

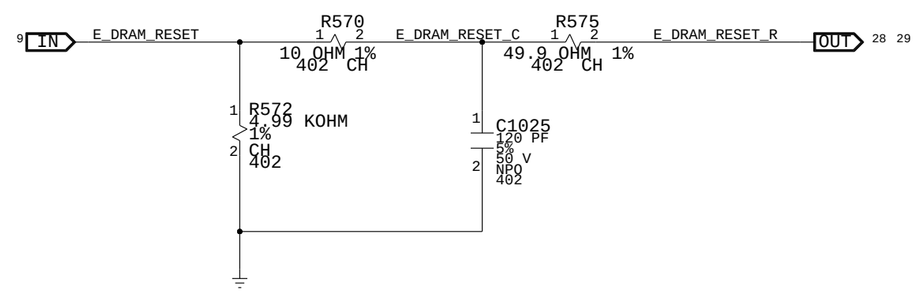

MICROSOFT CONFIDENTIAL	PROJECT NAME	PAGE	CSA PAGE	FAB	VER
	Cactus	28/82	28/82	G-R	0.991

MEMORY: CHANNEL E1

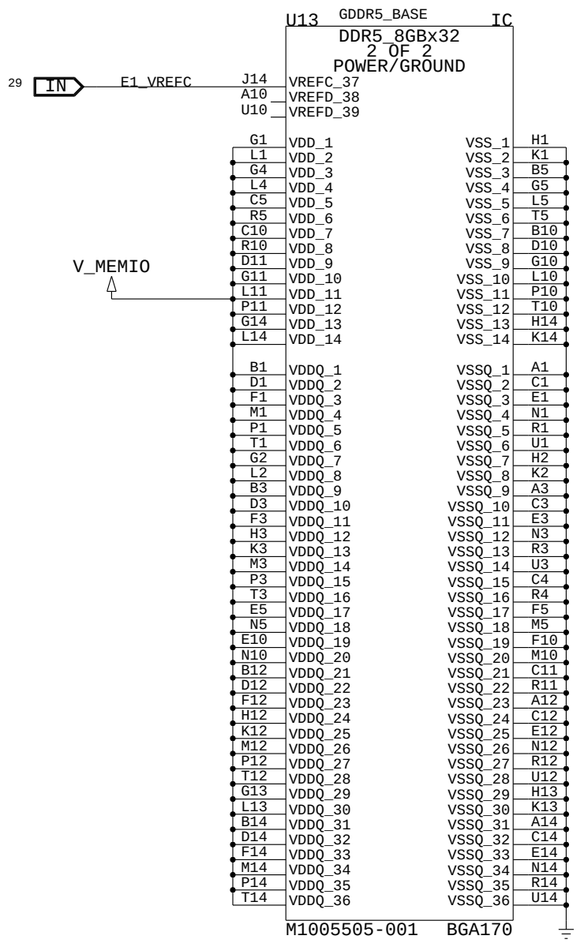

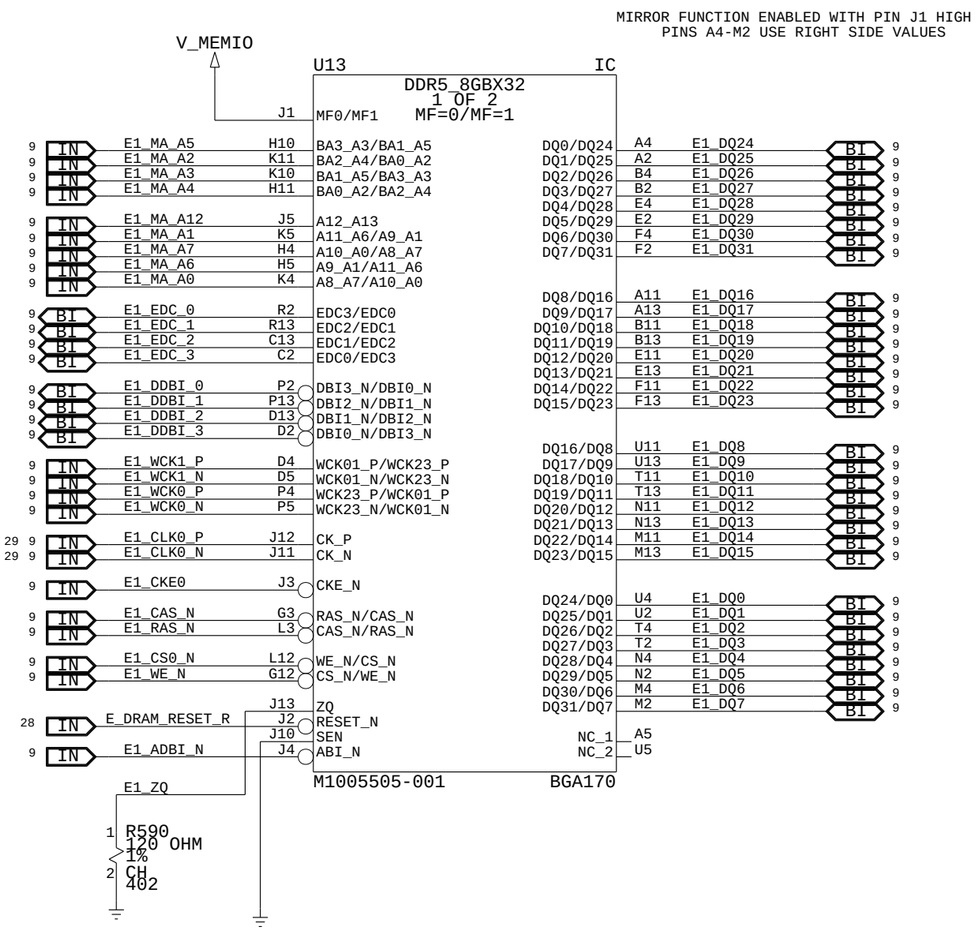

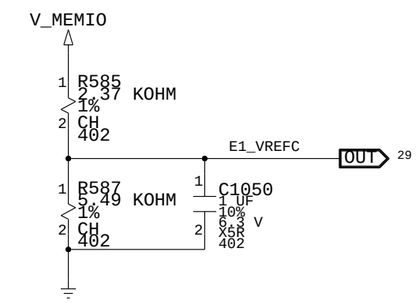

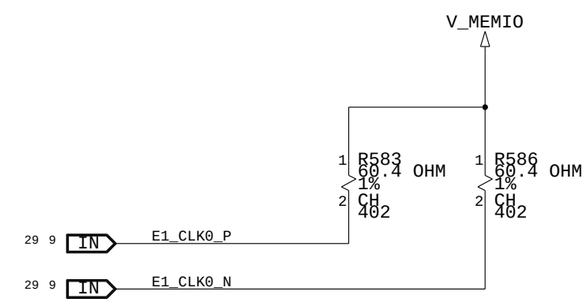

MICROSOFT CONFIDENTIAL	PROJECT NAME	PAGE	CSA PAGE	FAB	VER
	Cactus	29/82	29/82	G-R	0.991

MEMORY: CHANNEL F0

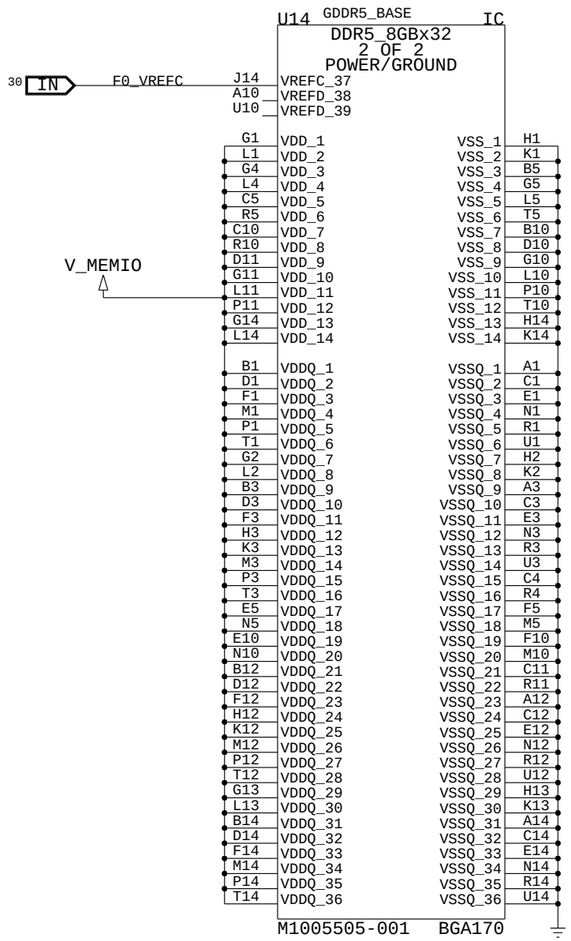

MIRROR FUNCTION DISABLED WITH PIN J1 LOW
PINS A4-M2 USE LEFT SIDE VALUES

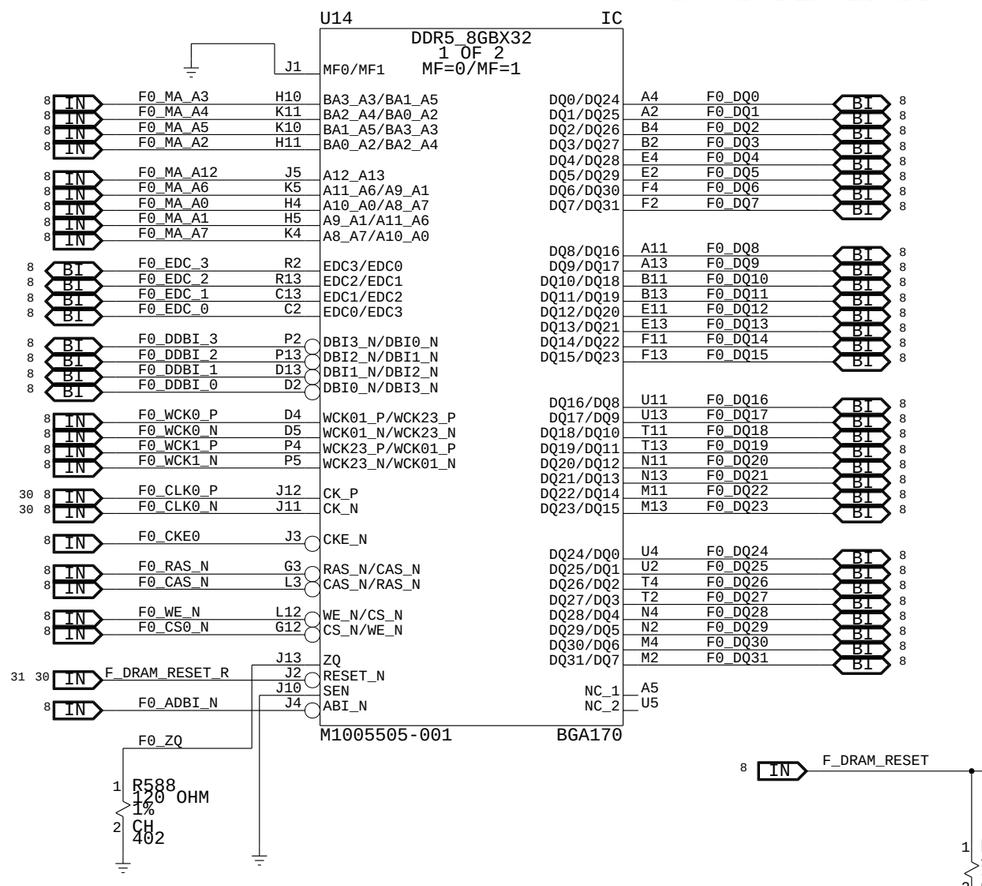

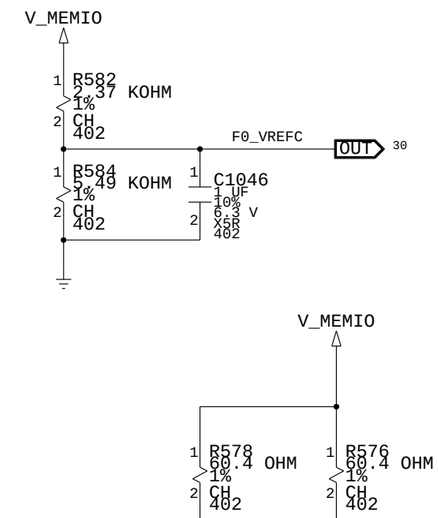

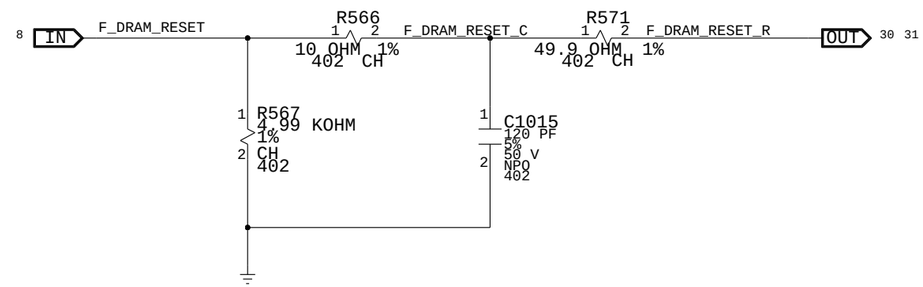

MICROSOFT CONFIDENTIAL	PROJECT NAME	PAGE	CSA PAGE	FAB	VER
	Cactus	30/82	30/82	G-R	0.991

MEMORY: CHANNEL F1

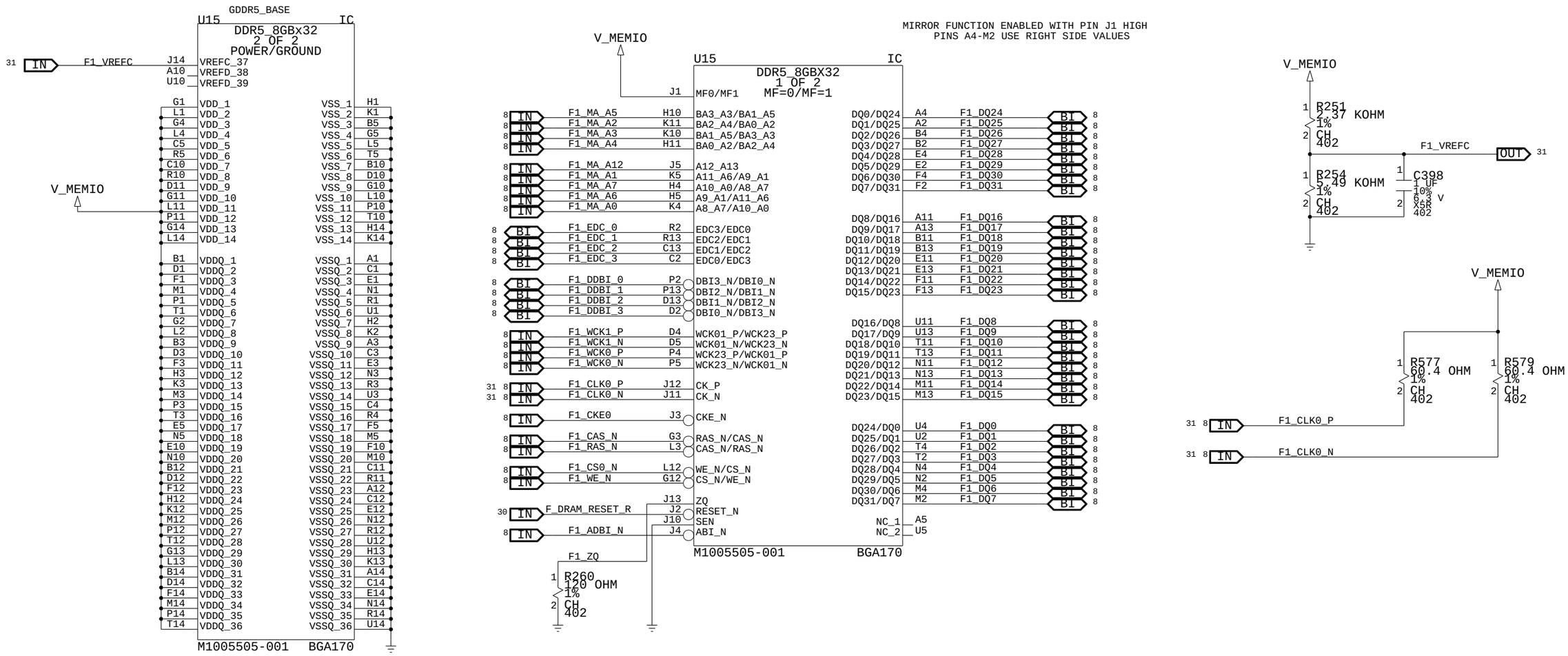

MICROSOFT CONFIDENTIAL	PROJECT NAME	PAGE	CSA PAGE	FAB	VER
	Cactus	31/82	31/82	G-R	0.991

MEMORY: CHANNEL E/F DECOUPLING

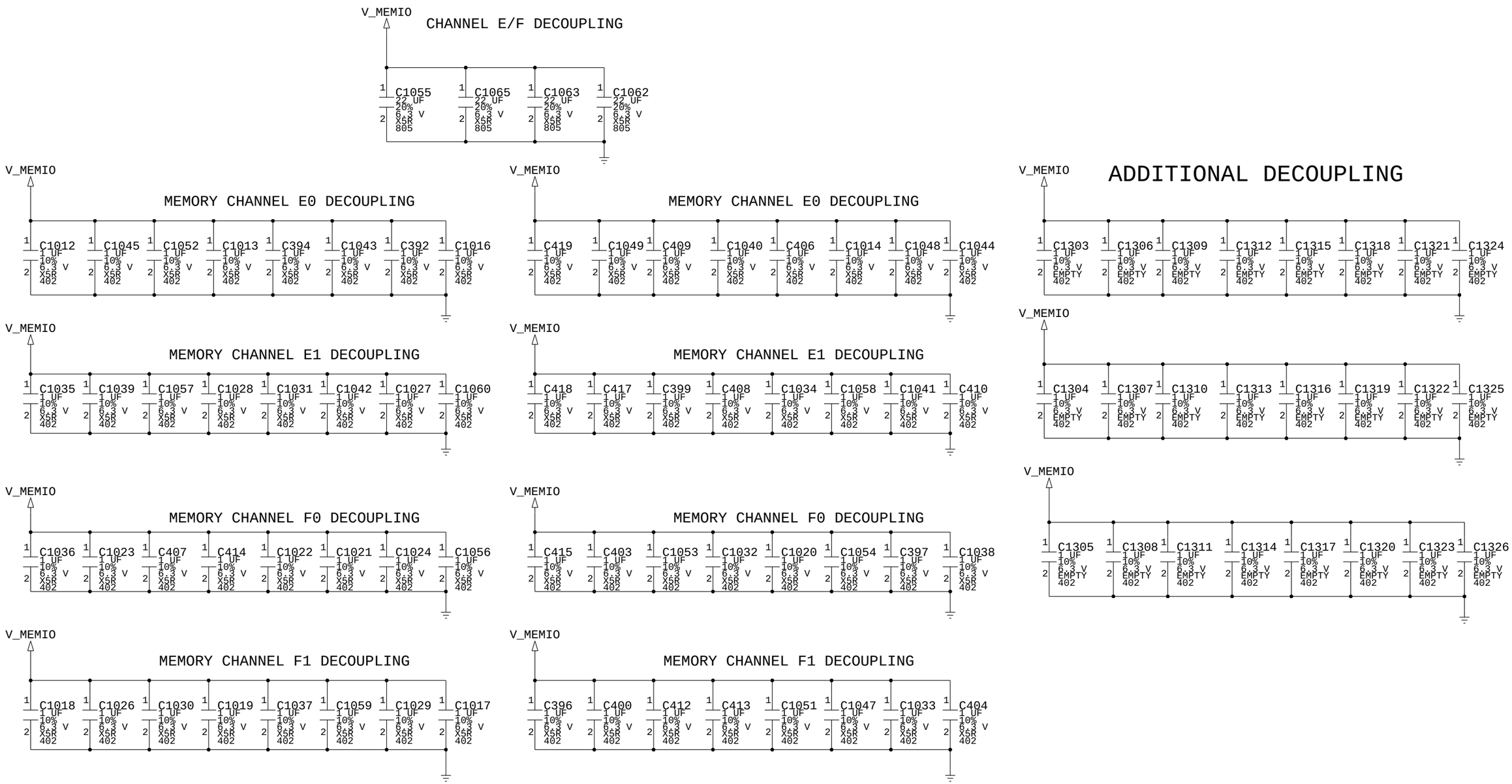

NOTE: ADDITIONAL MEMORY DECOUPLING ON PAGE 33

MICROSOFT CONFIDENTIAL	PROJECT NAME	PAGE	CSA PAGE	FAB	VER
	Cactus	32/82	32/82	G-R	0.991

MEMORY: ADDITIONAL DECOUPLING

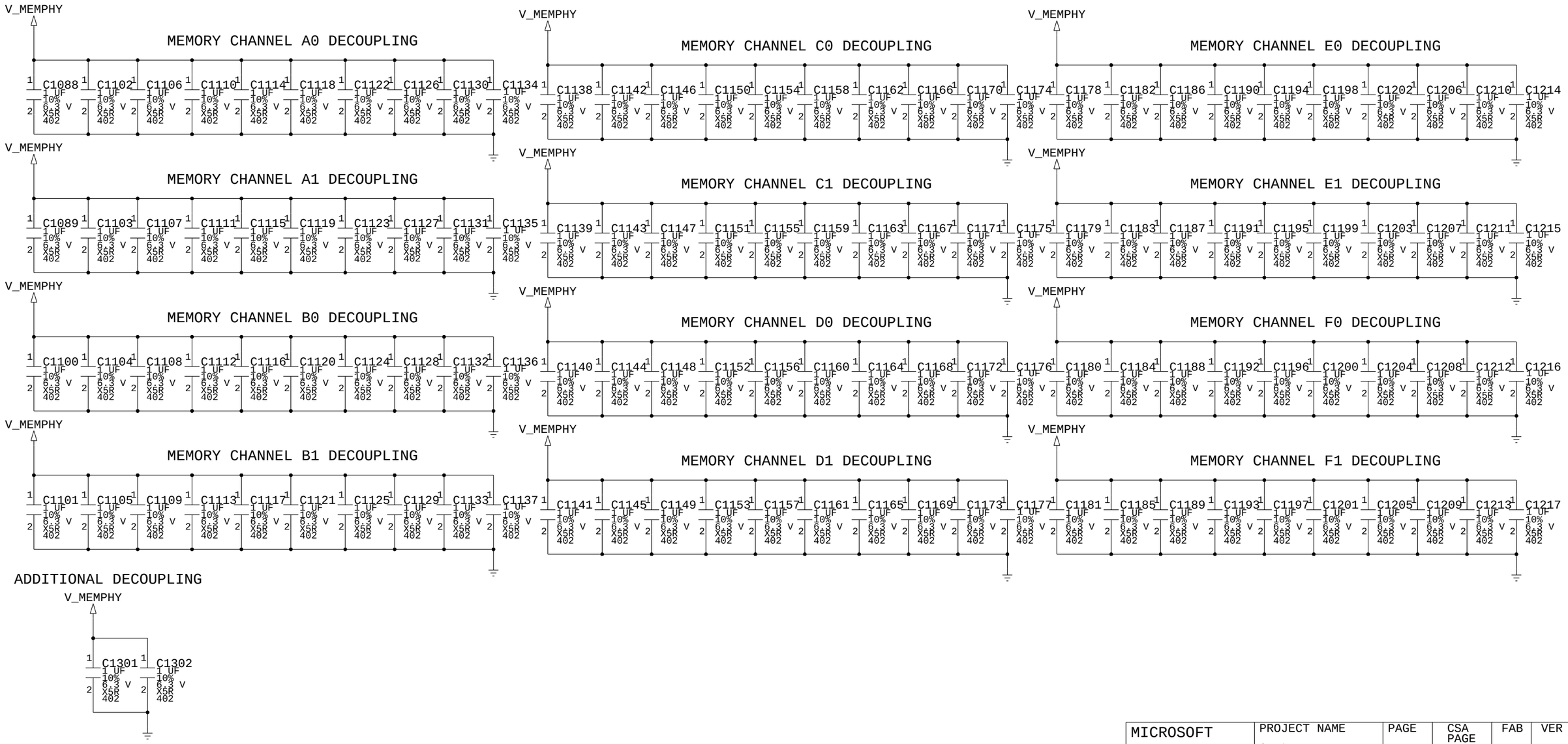

MICROSOFT CONFIDENTIAL	PROJECT NAME	PAGE	CSA PAGE	FAB	VER
	Cactus	33/82	33/82	G-R	0.991

KIC: USB

U2 KIC IC
6 of 11

Side	Pin	Signal	Pin	Signal	Side	Pin	Signal	Pin	Signal	Group
					USBD_D0_DP	AF8		USB2_WIFI_DP	BI 46	WIFI
					USBD_D0_DN	AE8		USB2_WIFI_DN	BI 46	
					USBC_D0_DP	AC4		USB2_AUX_DP	BI 45	REAR 1
					USBC_D0_DN	AC3		USB2_AUX_DN	BI 45	
REAR 1	45 IN USB3_AUX_RP	Y1	USBC_D1_RXP	USBC_D1_TXP	W3	USB3_AUX_TP_C	C501 0.1 UF 10% X5R 16 V 402	USB3_AUX_TP	OUT 45	
REAR 1	45 IN USB3_AUX_RN	Y2	USBC_D1_RXN	USBC_D1_TXN	W4	USB3_AUX_TN_C	C500 0.1 UF 10% X5R 16 V 402	USB3_AUX_TN	OUT 45	
REAR 0	45 IN USB3_BP_P1_RP	V1	USBB_D2_RXP	USBB_D2_TXP	U3	USB3_BP_P1_TP_C	C499 0.1 UF 10% X5R 16 V 402	USB3_BP_P1_TP	OUT 45	REAR 0
REAR 0	45 IN USB3_BP_P1_RN	V2	USBB_D2_RXN	USBB_D2_TXN	U4	USB3_BP_P1_TN_C	C498 0.1 UF 10% X5R 16 V 402	USB3_BP_P1_TN	OUT 45	
				USBB_D0_DP	AE4			USB2_BP_P1_DP	BI 45	
				USBB_D0_DN	AE3			USB2_BP_P1_DN	BI 45	
				USBB_D1_DP	AD2			USB2_BP_P0_DP 1 DB85		NOT USED
				USBB_D1_DN	AD1			USB2_BP_P0_DN 1 DB84		
NOT USED	DB90 1 USB3_BP_P0_RP	T1	USBB_D3_RXP	USBB_D3_TXP	R3			USB3_BP_P0_TP 1 DB14		
NOT USED	DB91 1 USB3_BP_P0_RN	T2	USBB_D3_RXN	USBB_D3_TXN	R4			USB3_BP_P0_TN 1 DB15		
FRONT	45 IN USB3_FP_P0_RP_BUFF	AA8	USBA_D2_RXP	USBA_D2_TXP	AB10	USB3_FP_P0_TP_C	C1097 0.1 UF 10% X5R 16 V 402	USB3_FP_P0_TP	OUT 45	FRONT
FRONT	45 IN USB3_FP_P0_RN_BUFF	AA7	USBA_D2_RXN	USBA_D2_TXN	AB9	USB3_FP_P0_TN_C	C1096 0.1 UF 10% 402 X5R 16 V	USB3_FP_P0_TN	OUT 45	
				USBA_D0_DP	AC7			USB2_FP_P0_DP	BI 45	
				USBA_D0_DN	AC8			USB2_FP_P0_DN	BI 45	
				USBA_D1_DP	AF6			USB2_ACC_DP	BI 51	FRONT PANEL ACC
				USBA_D1_DN	AF5			USB2_ACC_DN	BI 51	
NOT USED	DB18 1 USB3_ACC_RP	AB1	USBA_D3_RXP	USBA_D3_TXP	AA3			USB3_ACC_TP 1 DB20		NOT USED
NOT USED	DB17 1 USB3_ACC_RN	AB2	USBA_D3_RXN	USBA_D3_TXN	AA4			USB3_ACC_TN 1 DB22		

USBA_D2_AMOUT	AA5	USBA_D2_AMOUNT	1	DB97
USBA_D1_AMOUT	AE6	USBA_D1_AMOUNT	1	DB23
USBA_D0_AMOUT	AC11	USBA_D0_AMOUNT	1	DB100
USBB_D2_AMOUT	R5	USBB_D2_AMOUNT	1	DB10
USBB_D1_AMOUT	AD5	USBB_D1_AMOUNT	1	DB95
USBB_D0_AMOUT	AF4	USBB_D0_AMOUNT	1	DB94
USBC_D1_AMOUT	W5	USBC_D1_AMOUNT	1	DB24
USBC_D0_AMOUT	AC5	USBC_D0_AMOUNT	1	DB21
USBD_D0_AMOUT	AE9	USBD_D0_AMOUNT	1	DB98

USBA_D1_TXRTUNE AB11 — USBA_D1_TXRTUNE — R86 174 OHM 1% CH 402

X861949-001 BGA515

MICROSOFT CONFIDENTIAL	PROJECT NAME	PAGE	CSA PAGE	FAB	VER
	Cactus	34/82	34/82	G-R	0.991

KIC: PCIEX,SATA,VIDEO

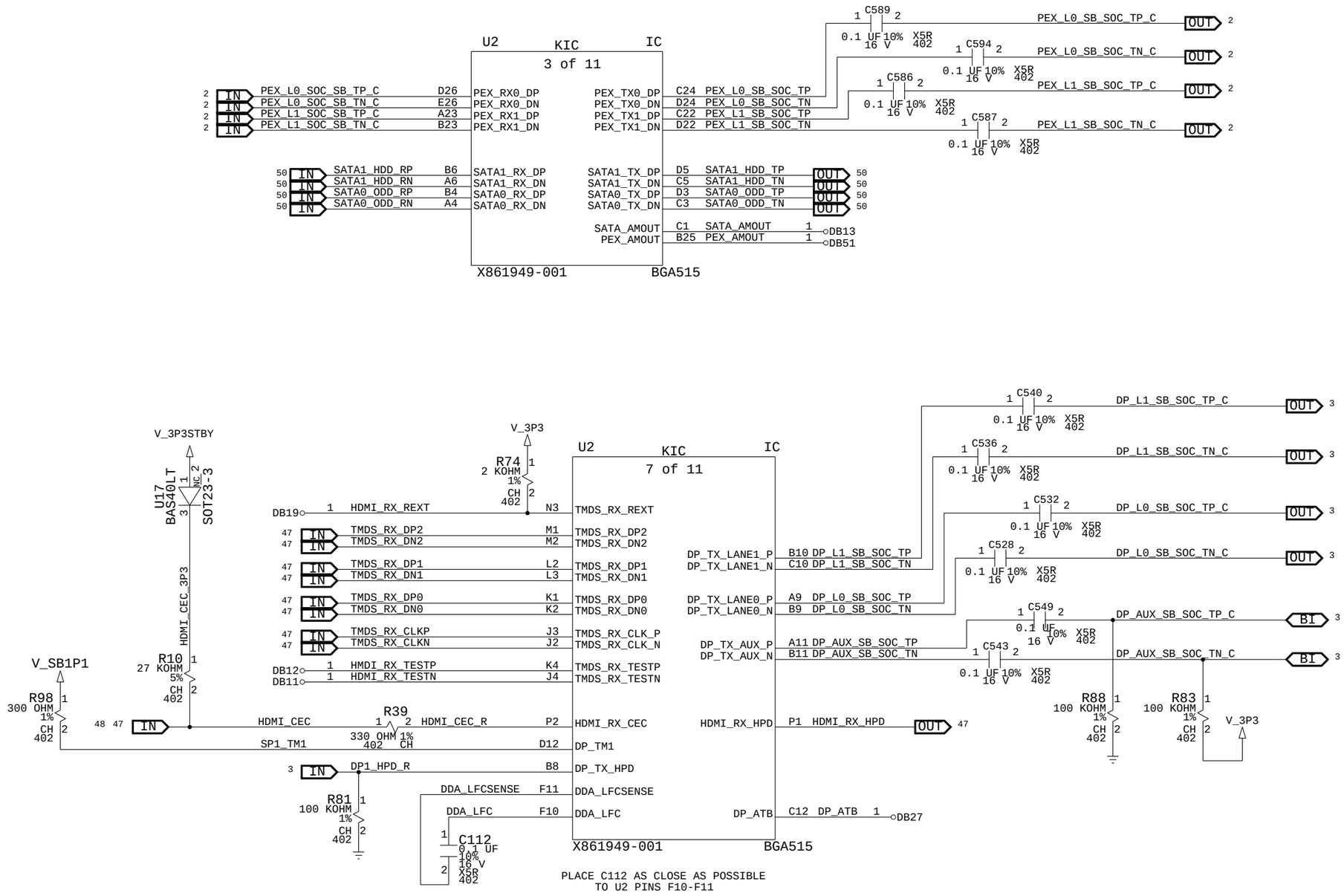

MICROSOFT CONFIDENTIAL	PROJECT NAME	PAGE	CSA PAGE	FAB	VER
	Cactus	35/82	35/82	G-R	0.991

KIC: SMC

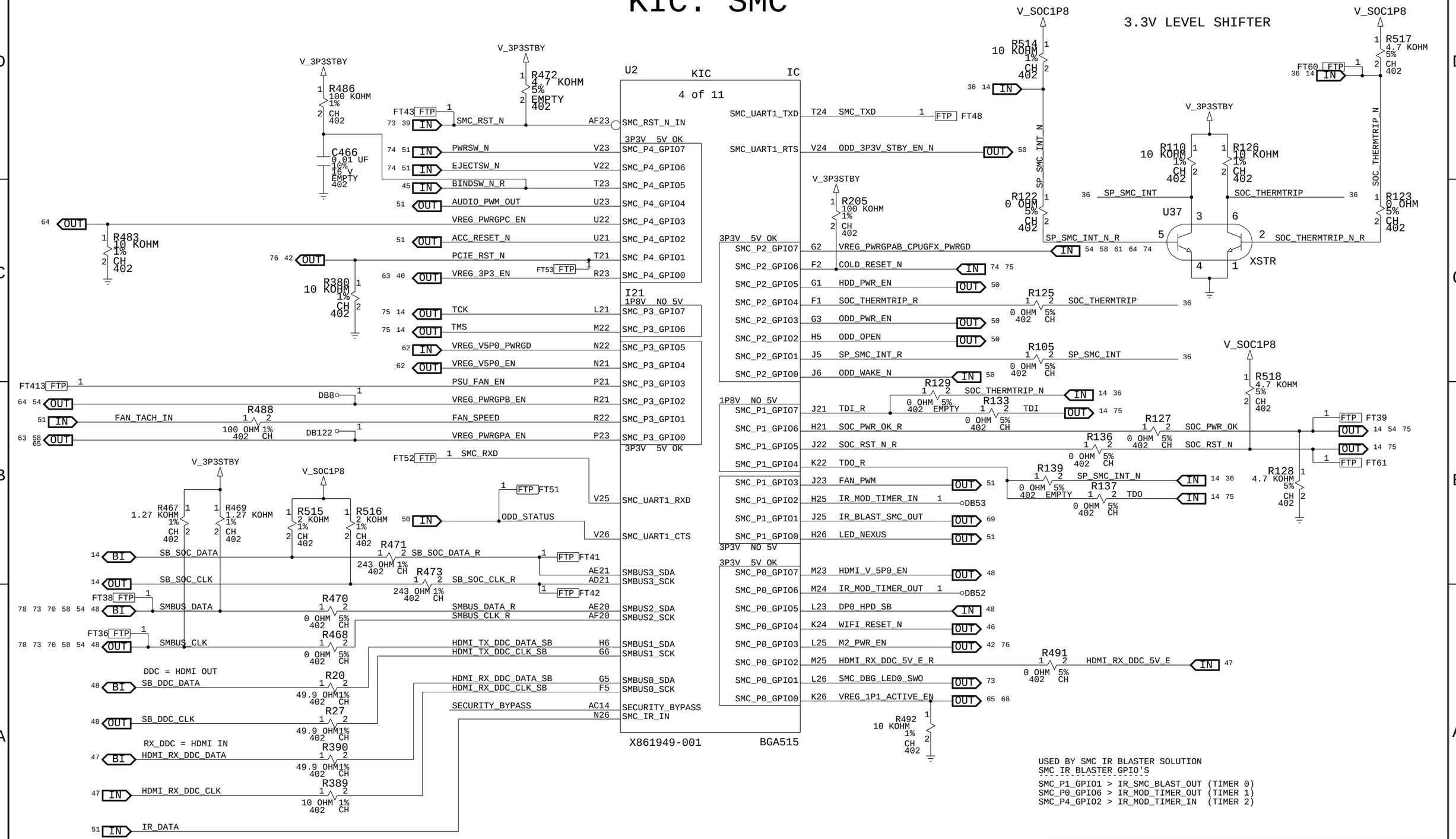

MICROSOFT CONFIDENTIAL	PROJECT NAME	PAGE	CSA PAGE	FAB	VER
	Cactus	36/82	36/82	G-R	0.991

KIC: FACET

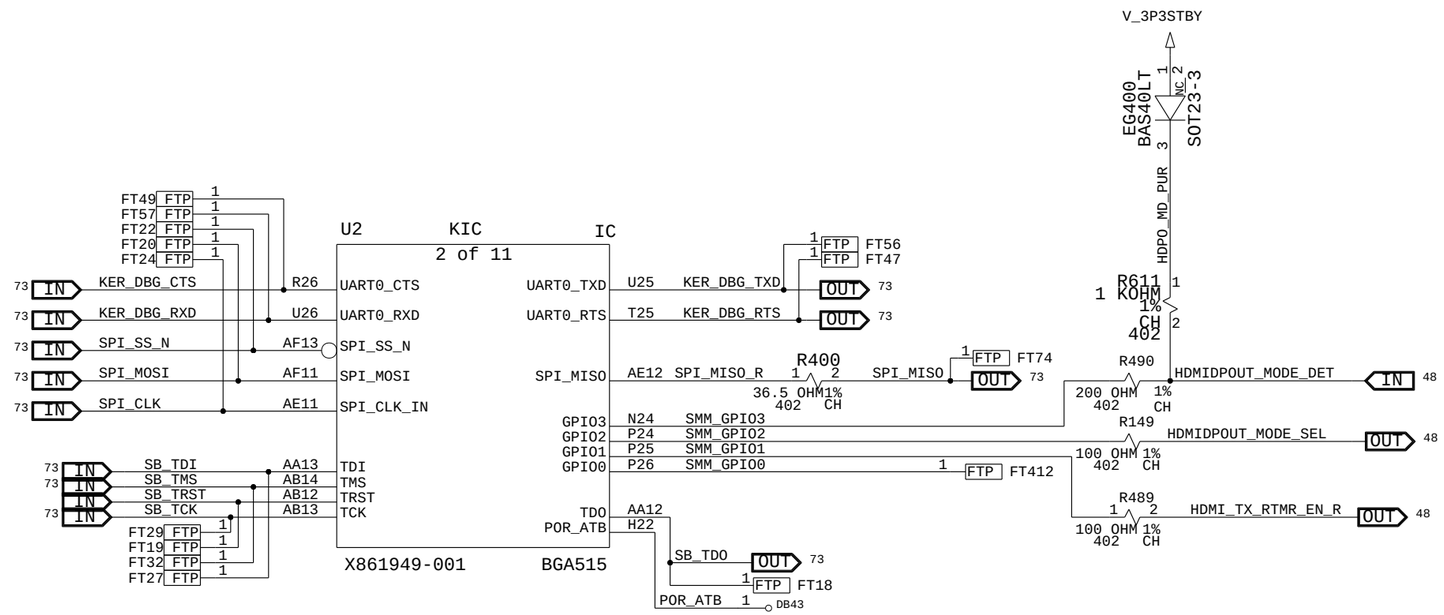

MICROSOFT CONFIDENTIAL	PROJECT NAME	PAGE	CSA PAGE	FAB	VER
	Cactus	37/82	37/82	G-R	0.99

KIC: POWER

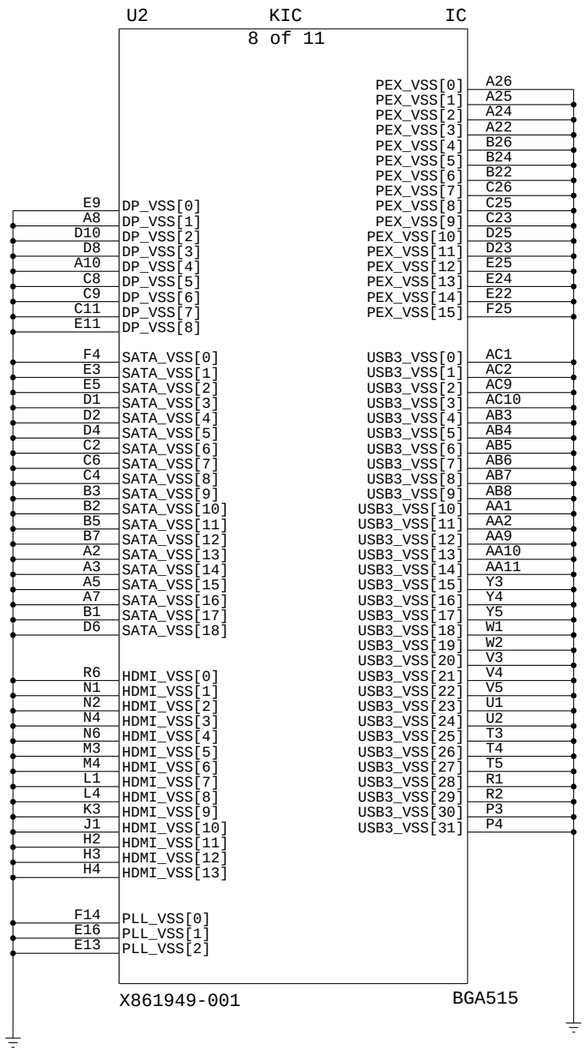

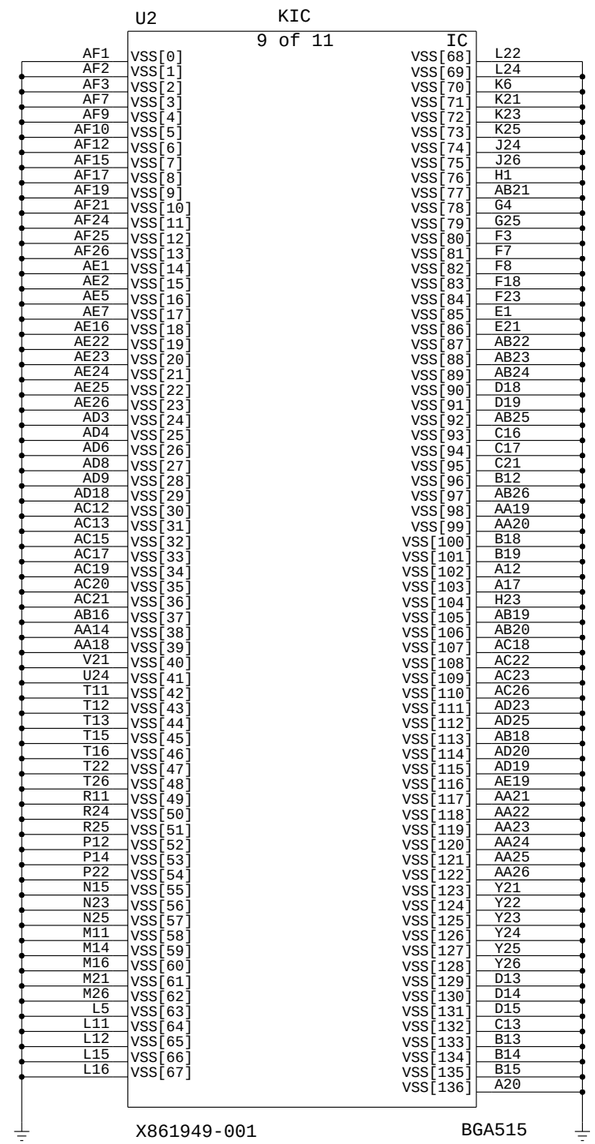

MICROSOFT CONFIDENTIAL	PROJECT NAME	PAGE	CSA PAGE	FAB	VER
	Cactus	38/82	38/82	G-R	0.991

KIC: CLOCKS,STRAPPING,POR

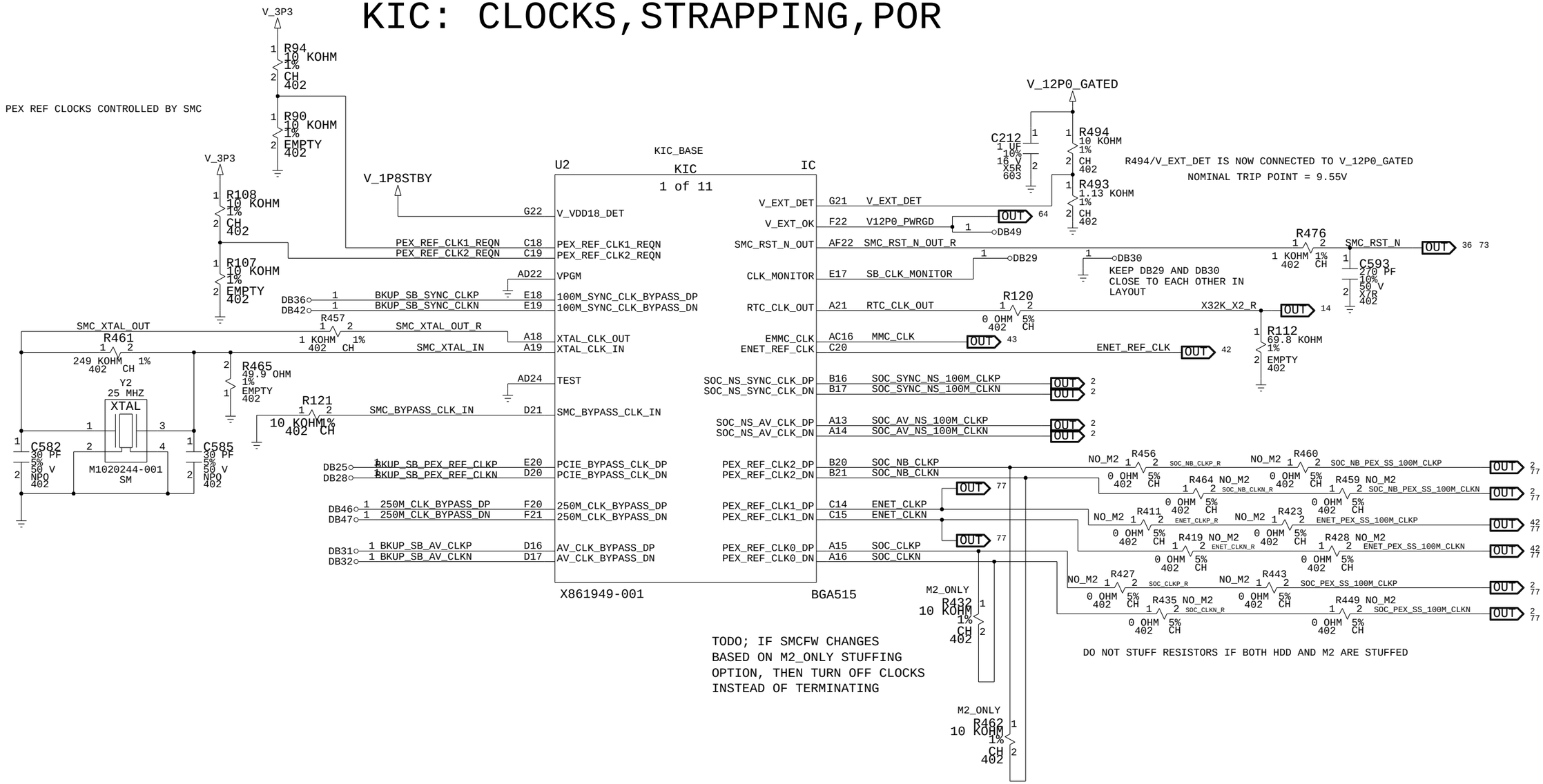

MS_PART#	MATL	REF_DES	DESCR.	BOM PROPERTY
X861949-007	IC	U2	IC,KRAKEN SB,BGA515	KIC_RETAIL
X861949-008	IC	U2	IC,KRAKEN SB,BGA515	KIC_DEV
X861949-008	EMPTY	U2	IC,KRAKEN SB,BGA515	KIC_EMPTY

MICROSOFT CONFIDENTIAL	PROJECT NAME	PAGE	CSA PAGE	FAB	VER
	Cactus	39/82	39/82	G-R	0.991

KIC: POWER

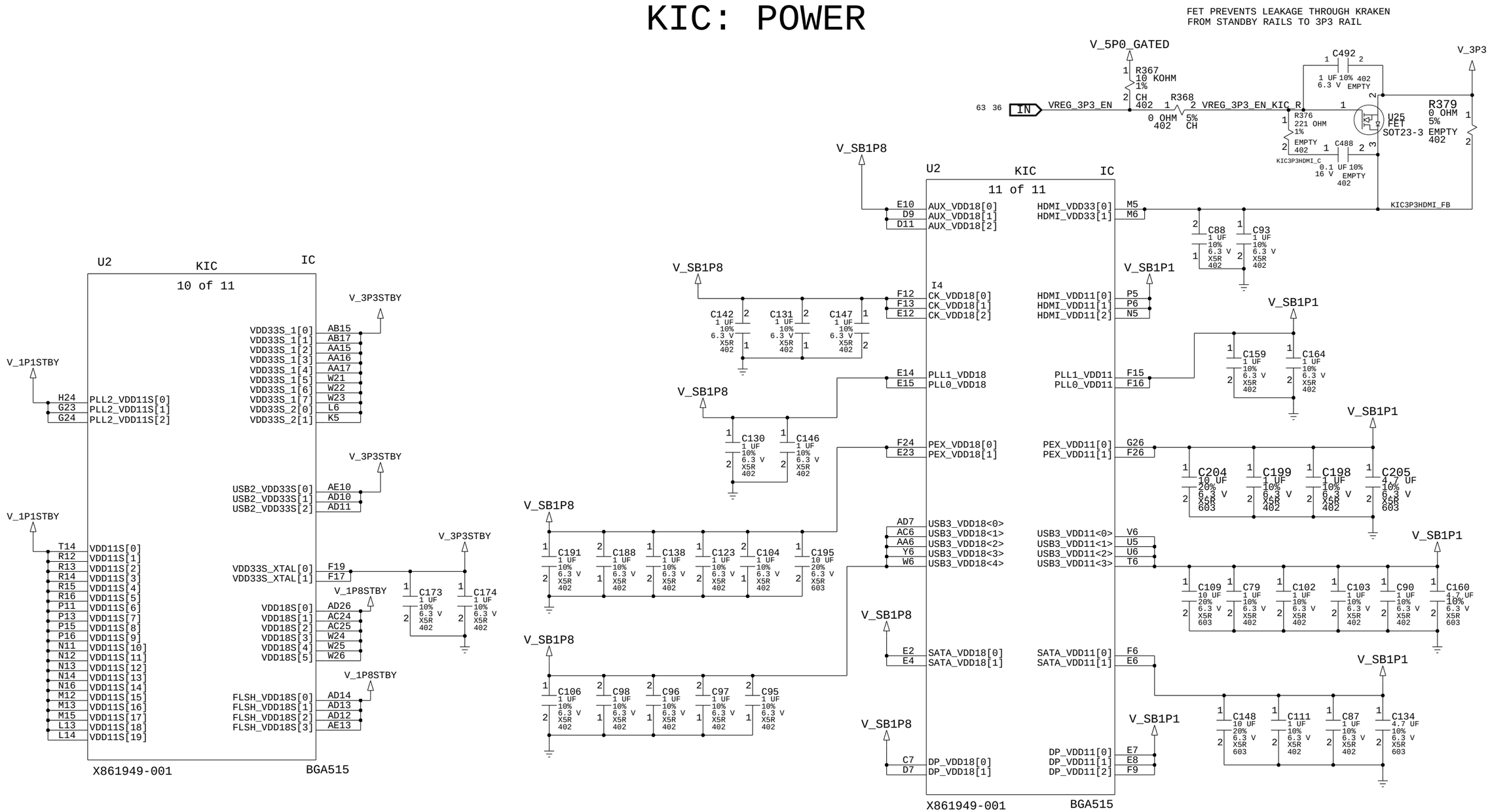

MICROSOFT CONFIDENTIAL	PROJECT NAME	PAGE	CSA PAGE	FAB	VER
	Cactus	40/82	40/82	G-R	0.991

KIC: DECOUPLING

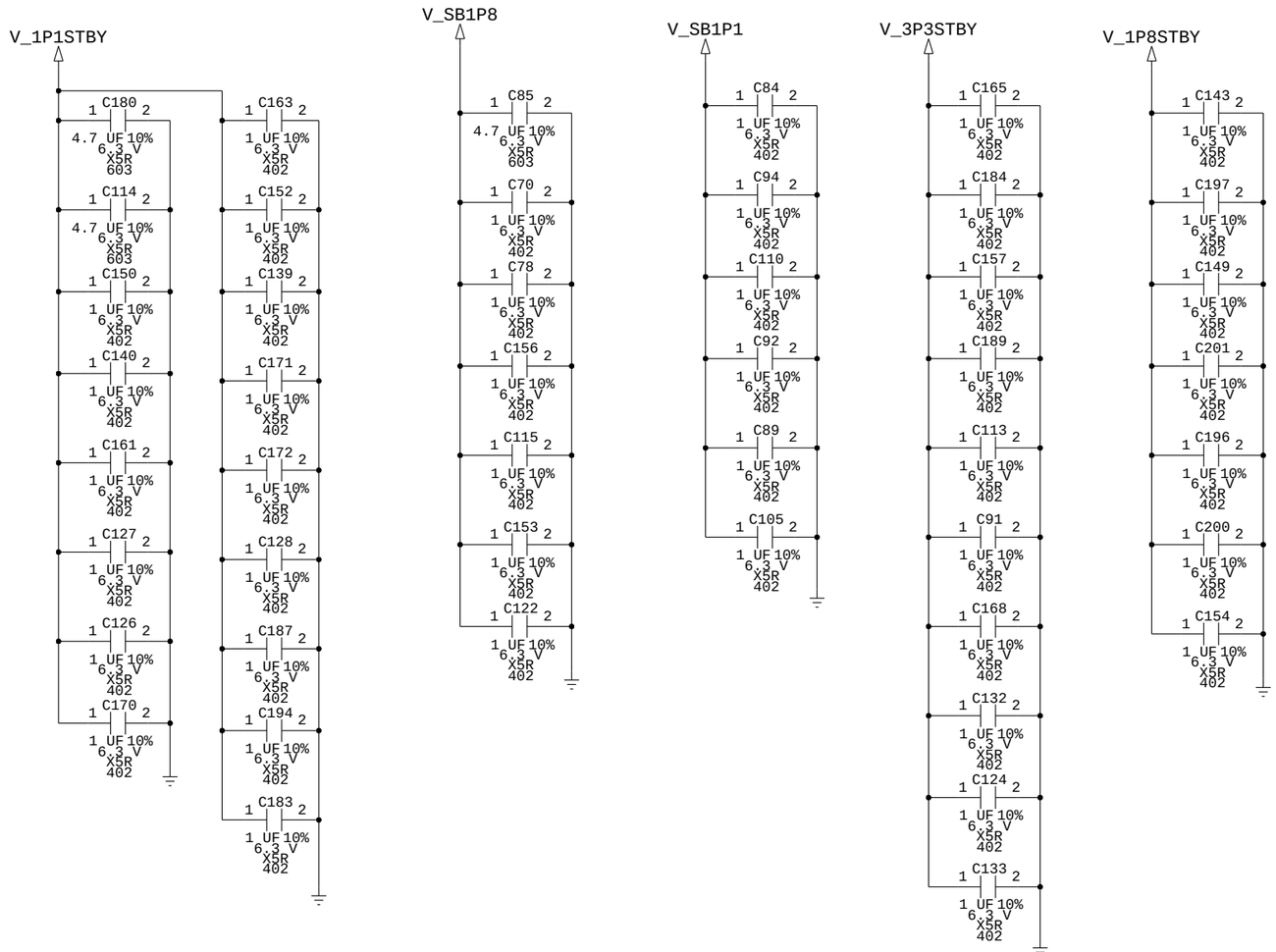

MICROSOFT CONFIDENTIAL	PROJECT NAME	PAGE	CSA PAGE	FAB	VER
	Cactus	41/82	41/82	G-R	0.991

ETHERNET CONTROLLER

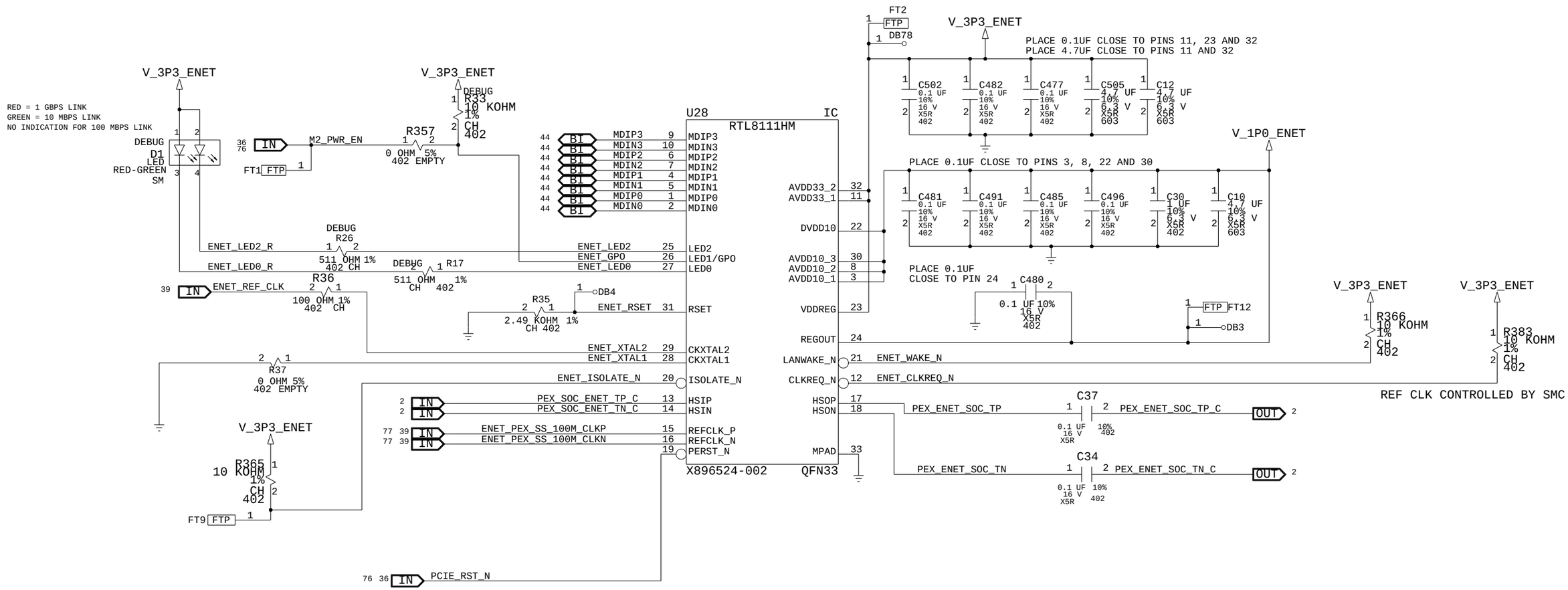

MICROSOFT CONFIDENTIAL	PROJECT NAME	PAGE	CSA PAGE	FAB	VER
	Cactus	42/82	42/82	G-R	0.991

EMMC MEMORY

NOTES:
1. MMC_X NETS ARE NEEDED TO IMPROVE PAD ADHESION USING 13 MIL TRACES CONNECTED TO DB PADS
2. EMMC DATA,CMD AND CLK SIGNALS ROUTED THROUGH MULTIPLE PADS TO PROVIDE SIGNAL ESCAPE
3. VERIFY ALL SIGNAL AND POWER PINS PRIOR TO CONSIDERING NEW EMMC MEMORY PARTS FOR VALIDATION

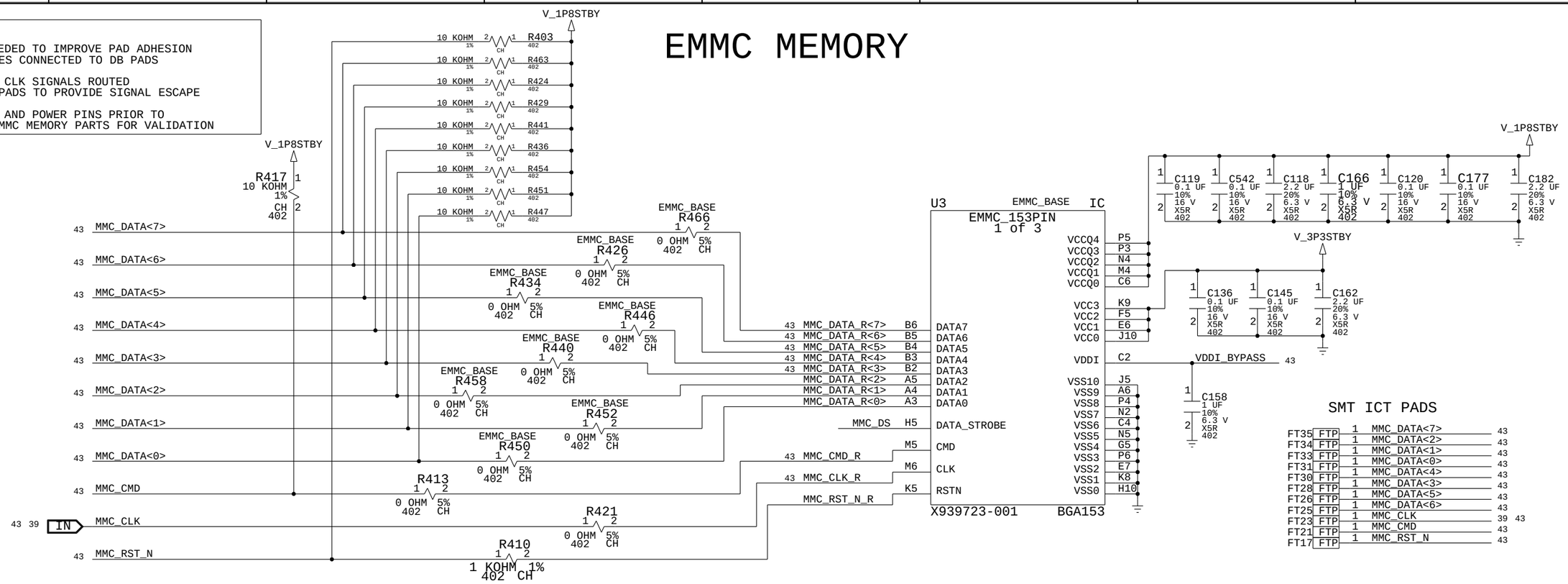

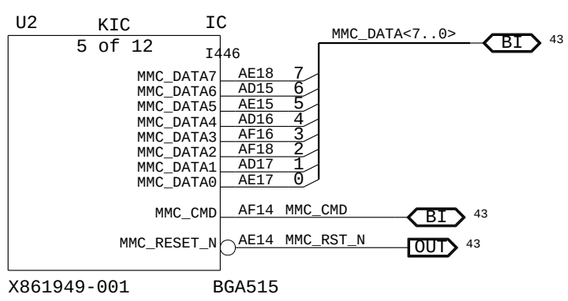

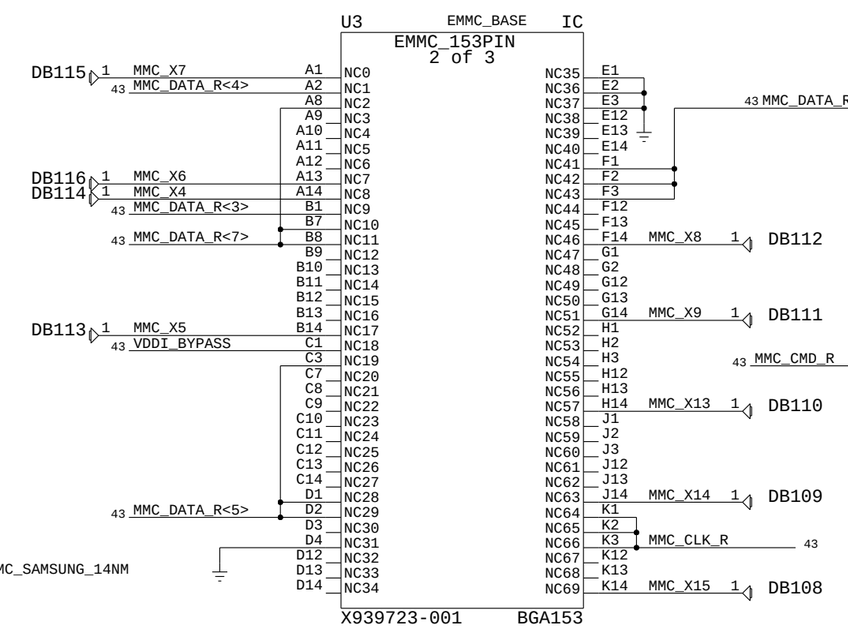

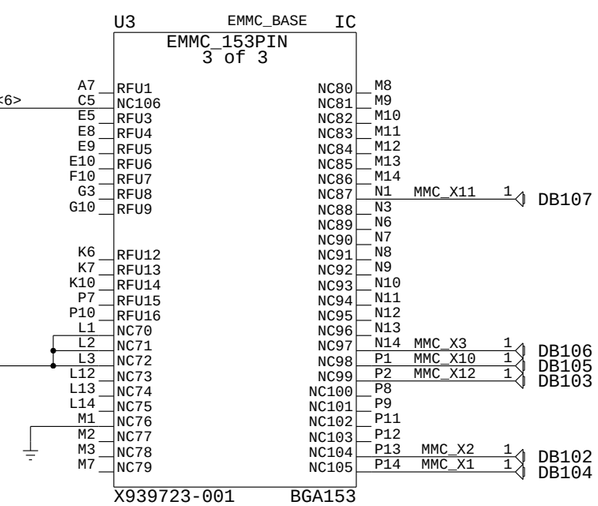

MS_PART#	MATL	REF_DES	DESCR.	BOM PROPERTY
X934261-001	IC	U3	MEM,8GB,EMMC,FLASH,15NM,BGA153,TOSHIBA	EMMC_TOSHIBA_15NM
X945540-002	IC	U3	MEM,8GB,EMMC,FLASH,14NM,BGA153,SAMSUNG	EMMC_SAMSUNG_14NM
X939723-001	IC	U3	MEM,8GB,EMMC,FLASH,16NM,BGA153,HYNIX	EMMC_HYNIX_16NM
X800617-001	RES	R426,R434,R440,R446,R450,R452,R458,R466	49.9 OHM 1%,1/16W,0402	EMMC_TOSHIBA_15NM,EMMC_SAMSUNG_14NM
X809936-001	RES	R426,R434,R440,R446,R450,R452,R458,R466	100 OHM 1%,1/16W,0402	EMMC_HYNIX_16NM

MICROSOFT CONFIDENTIAL	PROJECT NAME	PAGE	CSA PAGE	FAB	VER
	Cactus	43/82	43/82	G-R	0.991

CONN: RJ45,TOSLINK

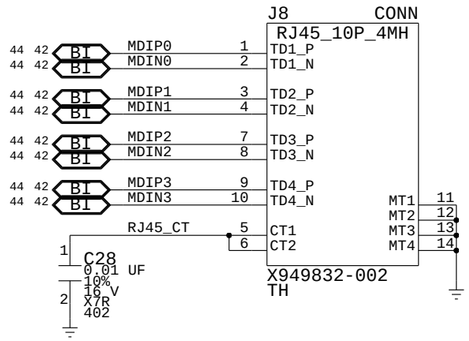

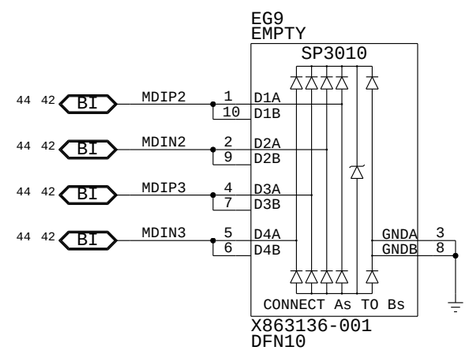

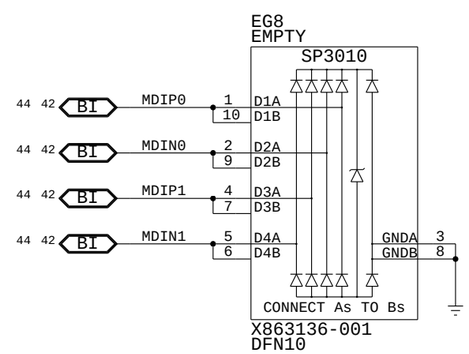

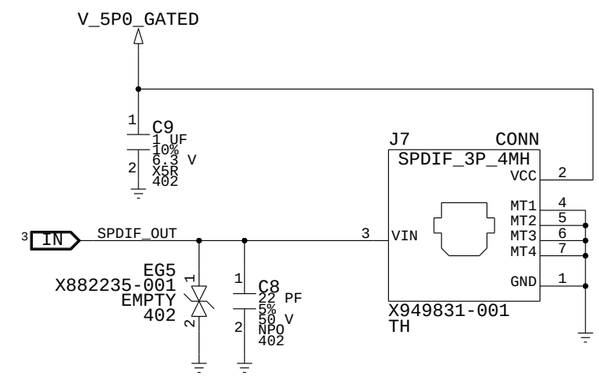

MICROSOFT CONFIDENTIAL	PROJECT NAME	PAGE	CSA PAGE	FAB	VER
	Cactus	44/82	44/82	G-R	0.991

CONN: USB (FRONT & REAR)

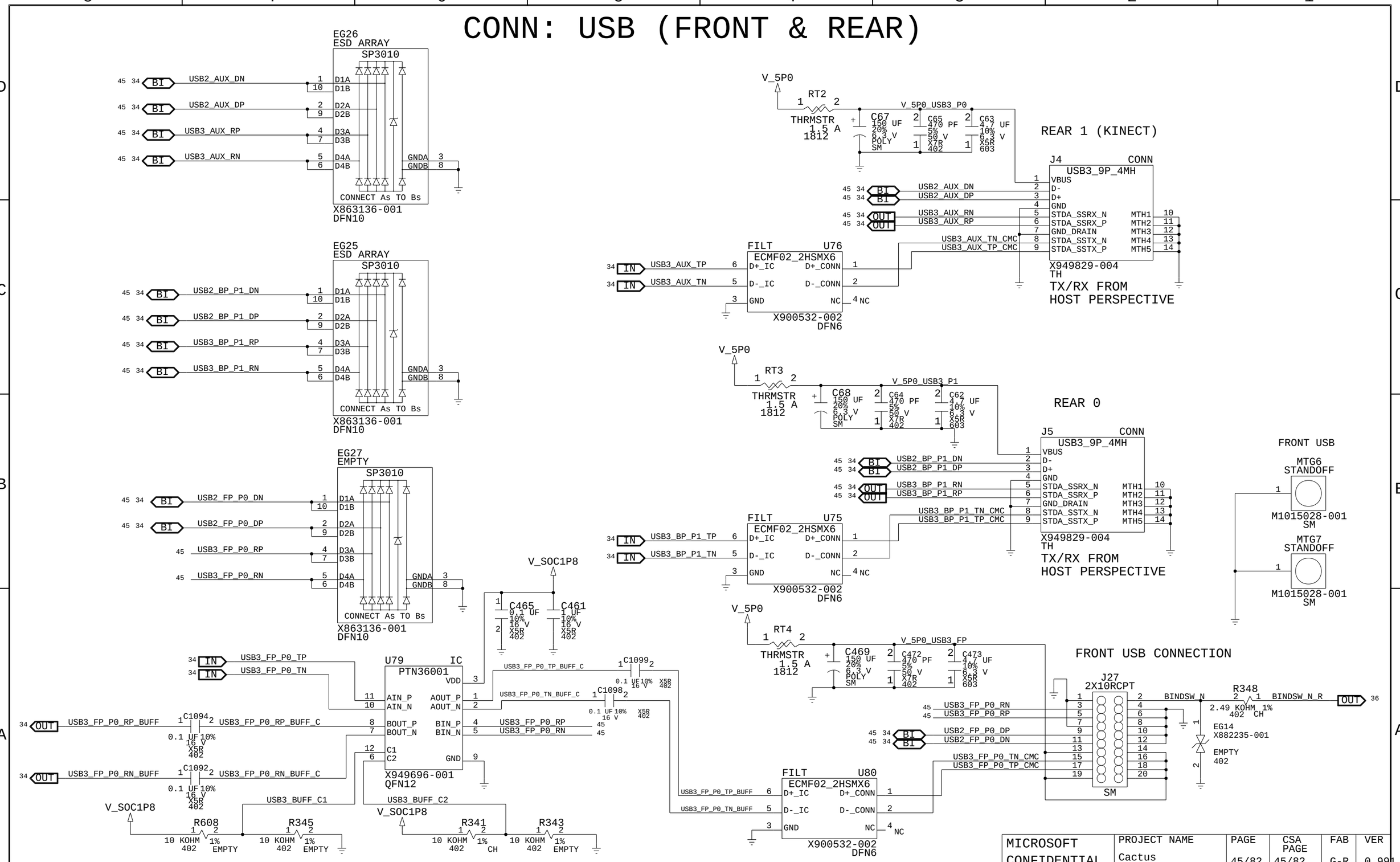

MICROSOFT CONFIDENTIAL	PROJECT NAME	PAGE	CSA PAGE	FAB	VER
	Cactus	45/82	45/82	G-R	0.991

CONN: WIFI

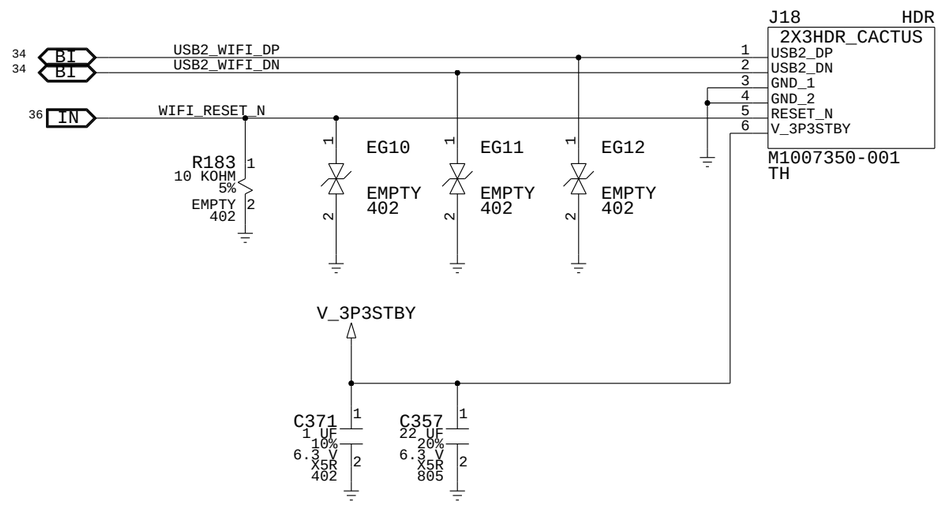

MICROSOFT CONFIDENTIAL	PROJECT NAME	PAGE	CSA PAGE	FAB	VER
	Cactus	46/82	46/82	G-R	0.991

CONN: HDMI IN

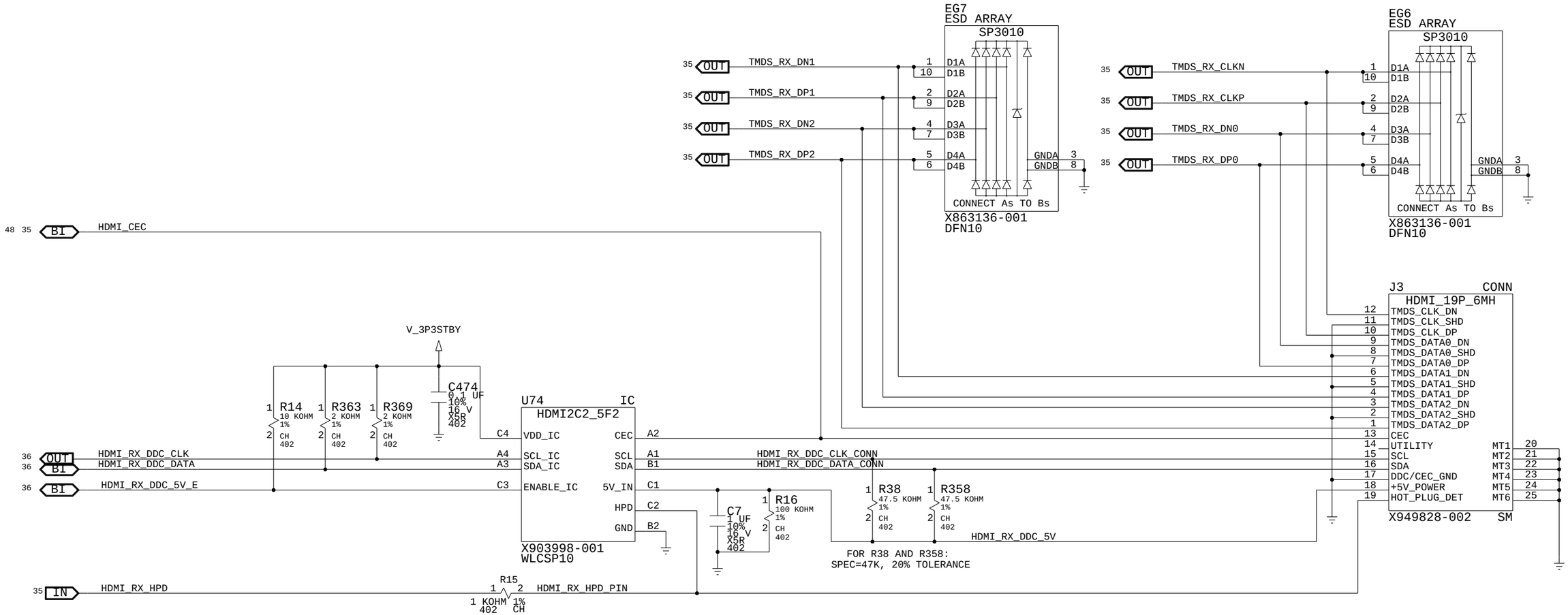

MICROSOFT CONFIDENTIAL	PROJECT NAME	PAGE	CSA PAGE	FAB	VER
	Cactus	47/82	47/82	G-R	0.991

CONN: HDMI OUT

TDP158 CONTROL SLAVE ADDRESS			
SELECTED	A1/A0	7-BIT ADDRESS	8-BIT ADDRESS
-->	00	0X5E	BC/BD
	01	0X5D	BA/BB
	10	0X5C	B8/B9
	11	0X5B	B6/B7

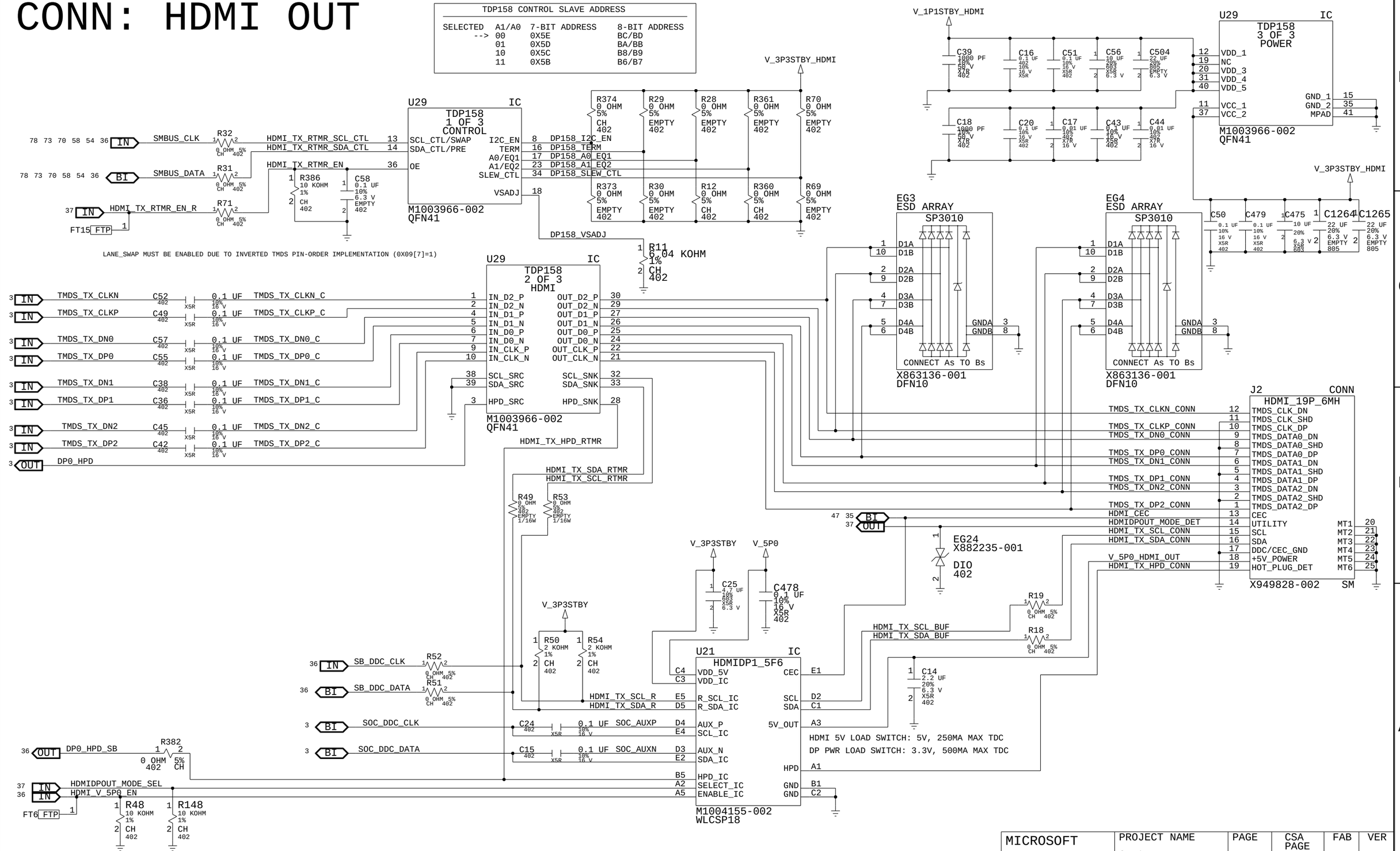

MICROSOFT CONFIDENTIAL	PROJECT NAME	PAGE	CSA PAGE	FAB	VER
	Cactus	48/82	48/82	G-R	0.991

HDMI LOAD SWITCHES

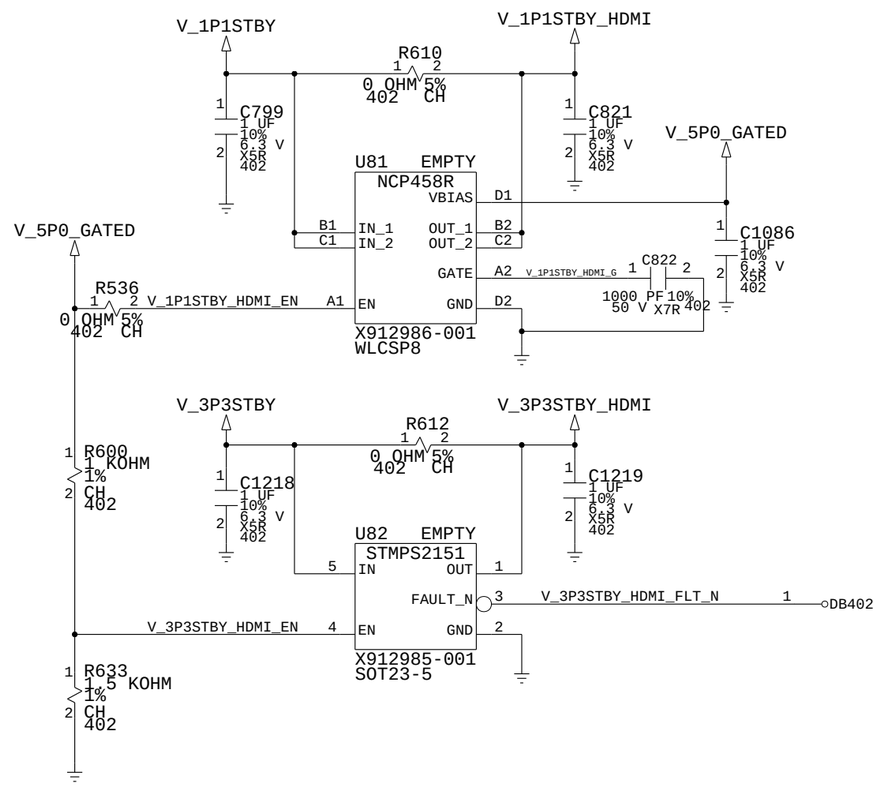

RE-DRIVER	U29	R610	R612	U81	U82
PG1.0	M1003966-001	EMPTY	EMPTY	STUFF	STUFF
PG1.1	M1003966-002	STUFF	STUFF	EMPTY	EMPTY

CONN: ODD & HDD

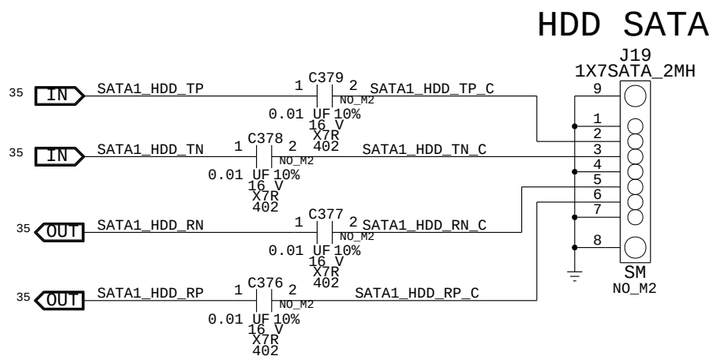

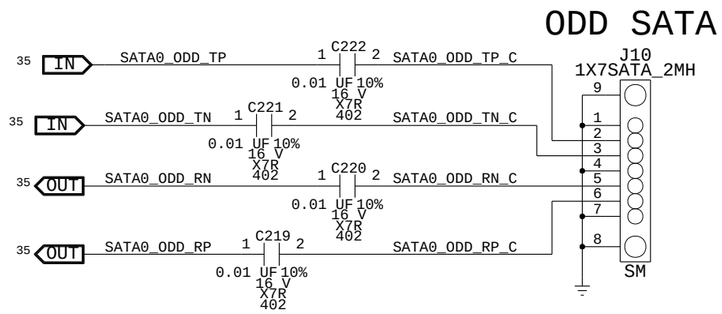

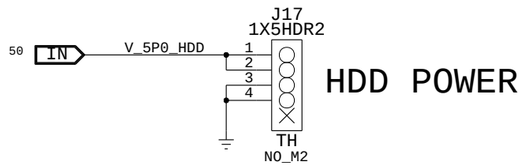

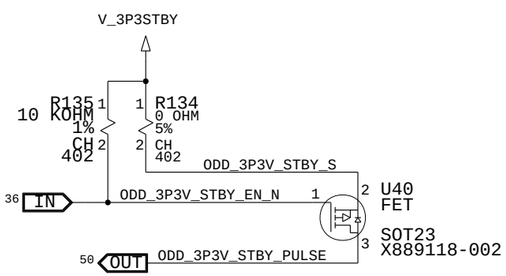

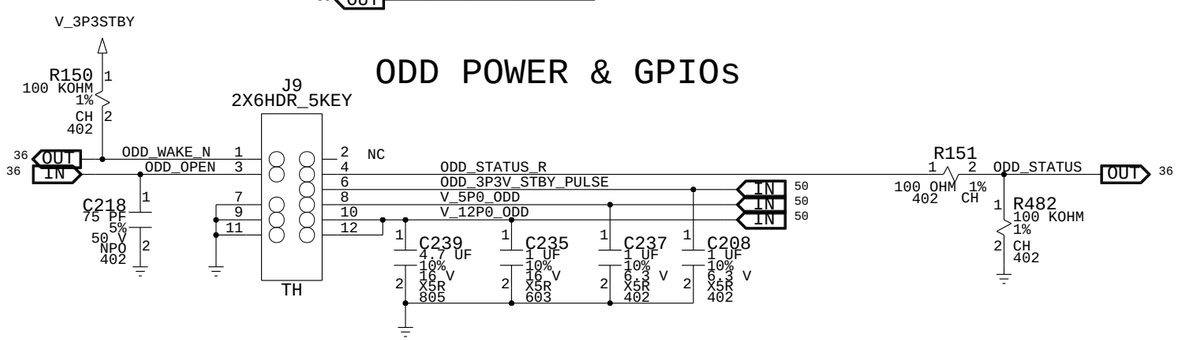

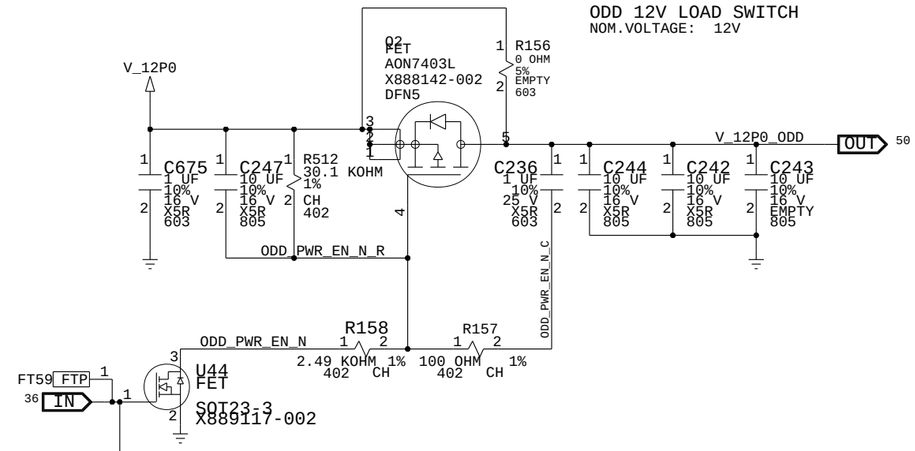

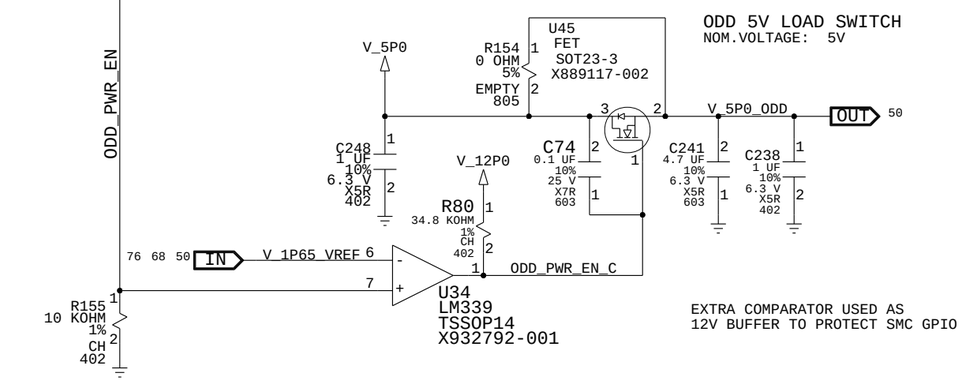

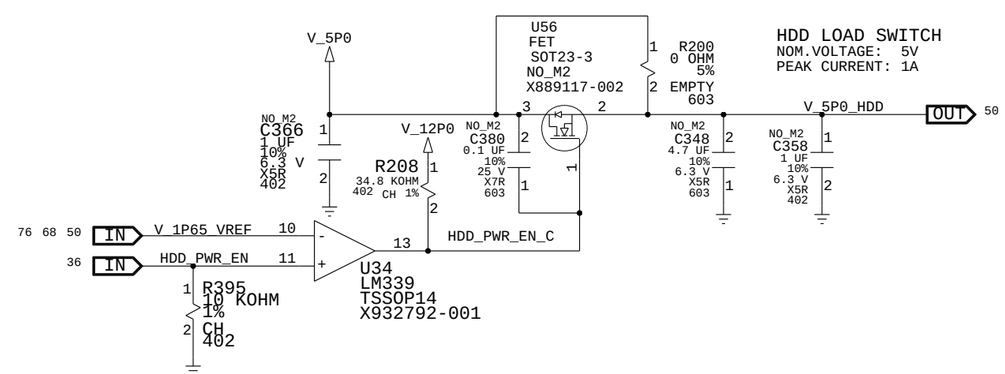

MICROSOFT CONFIDENTIAL	PROJECT NAME	PAGE	CSA PAGE	FAB	VER
	Cactus	50/82	50/82	G-R	0.991

CONN: FRONT PANEL,FAN, AUDIO

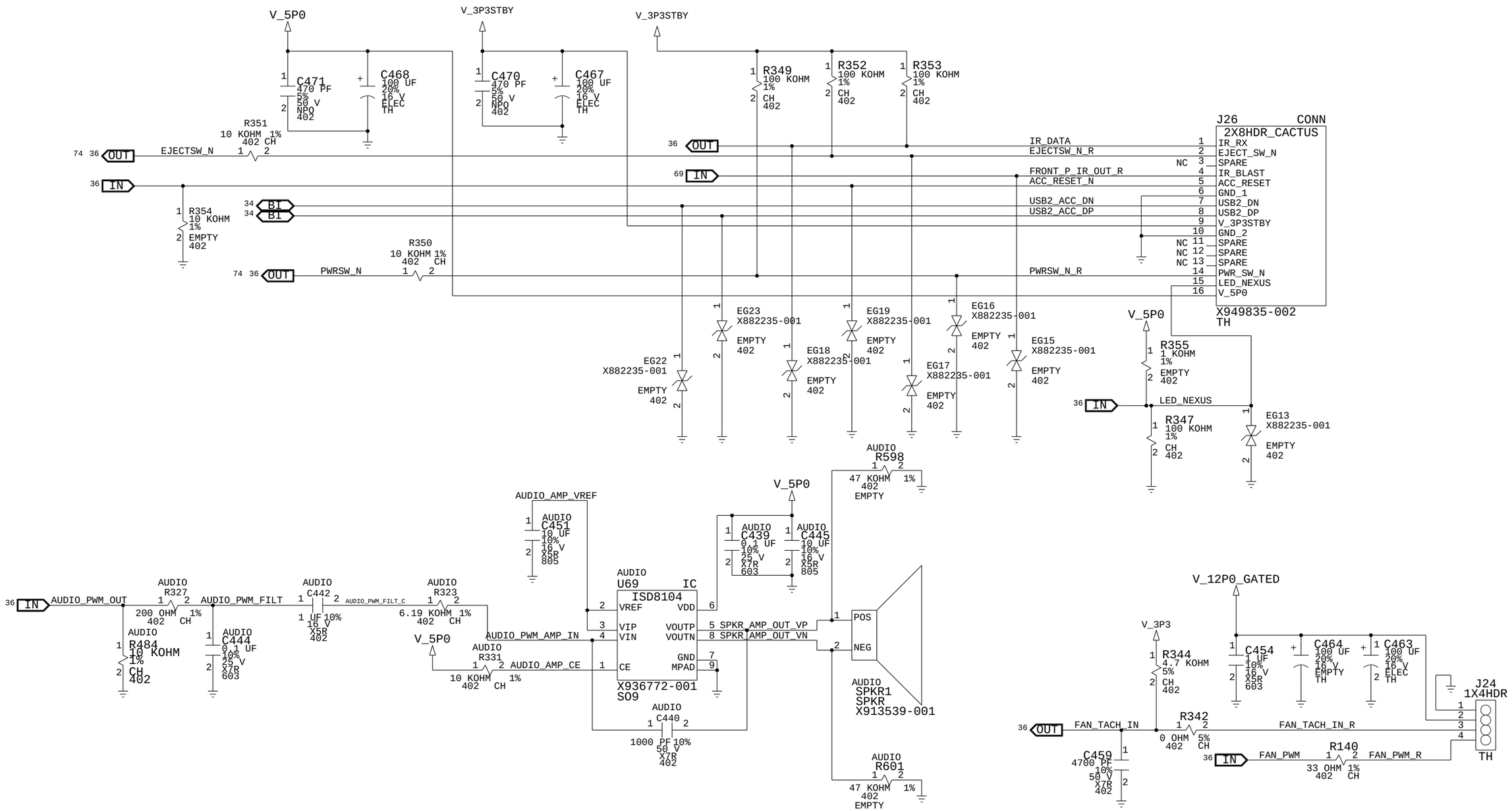

MICROSOFT CONFIDENTIAL	PROJECT NAME	PAGE	CSA PAGE	FAB	VER
	Cactus	51/82	51/82	G-R	0.991

CONN: POWER

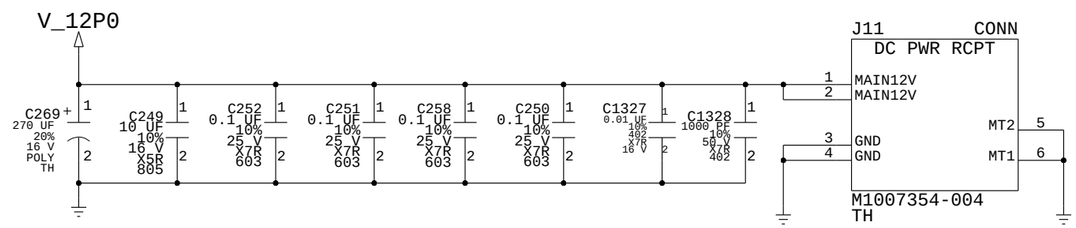

MICROSOFT CONFIDENTIAL	PROJECT NAME	PAGE	CSA PAGE	FAB	VER
	Cactus	52/82	52/82	G-R	0.991

VREGS: INPUT AND OUTPUT FILTERS

NBCORE INPUT FILTER

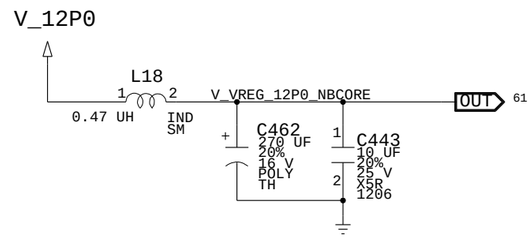

V_5P0 AND V_3P3 INPUT FILTER

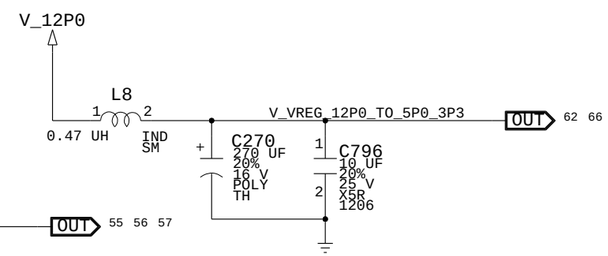

GFX/CPU INPUT FILTER

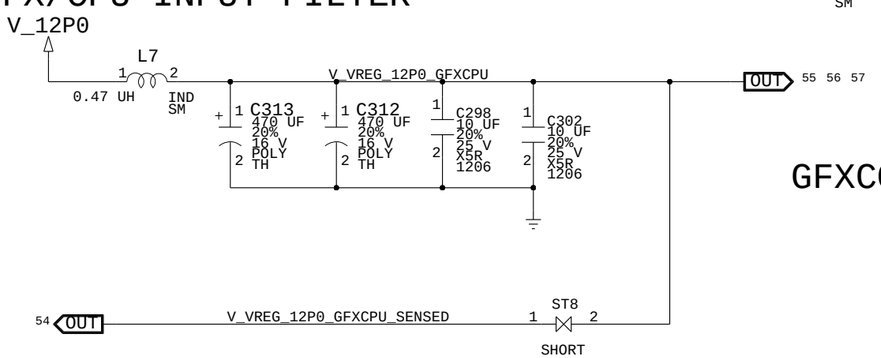

GFXCORE OUTPUT FILTER

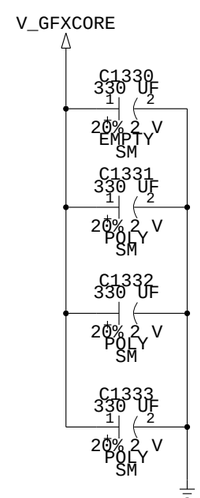

MEMIO/MEMPHY INPUT FILTER

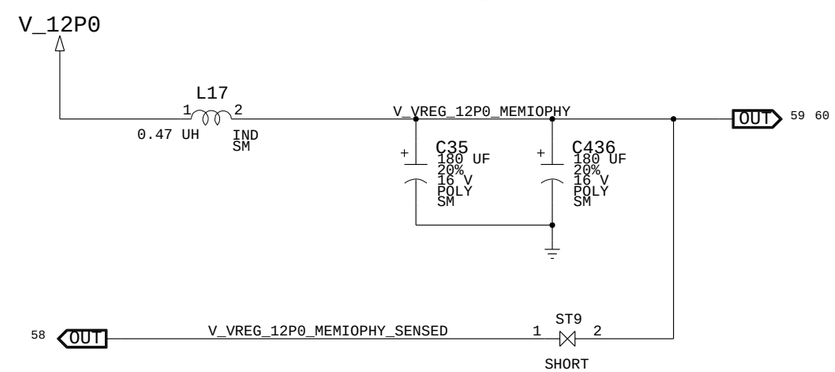

MICROSOFT CONFIDENTIAL	PROJECT NAME	PAGE	CSA PAGE	FAB	VER
	Cactus	53/82	53/82	G-R	0.991

VREGS: GFXCORE / CPUCORE

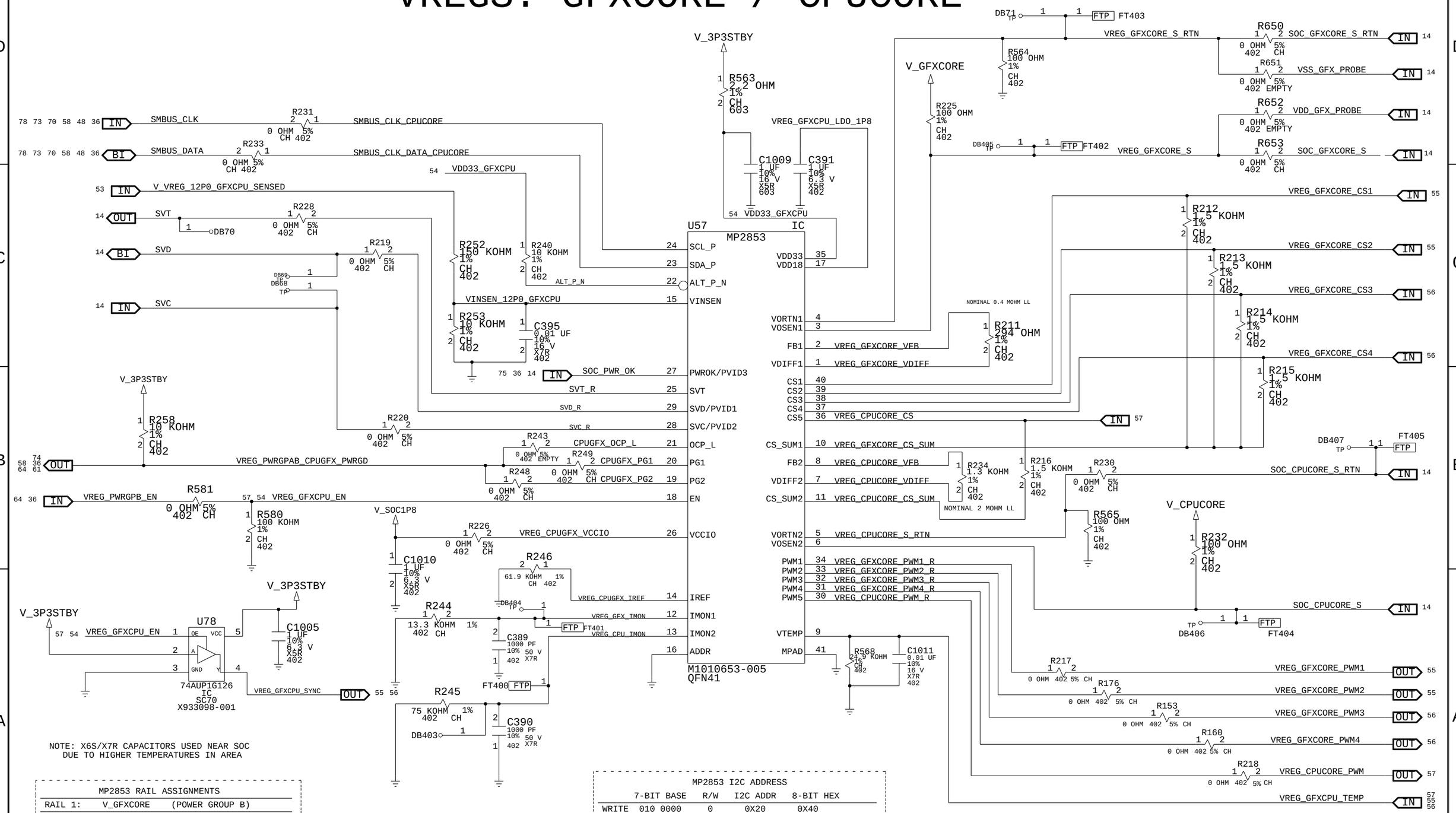

MICROSOFT CONFIDENTIAL	PROJECT NAME	PAGE	CSA PAGE	FAB	VER
	Cactus	54/82	54/82	G-R	0.991

VREGS: GFXCORE OUTPUT PHASE 1 & 2

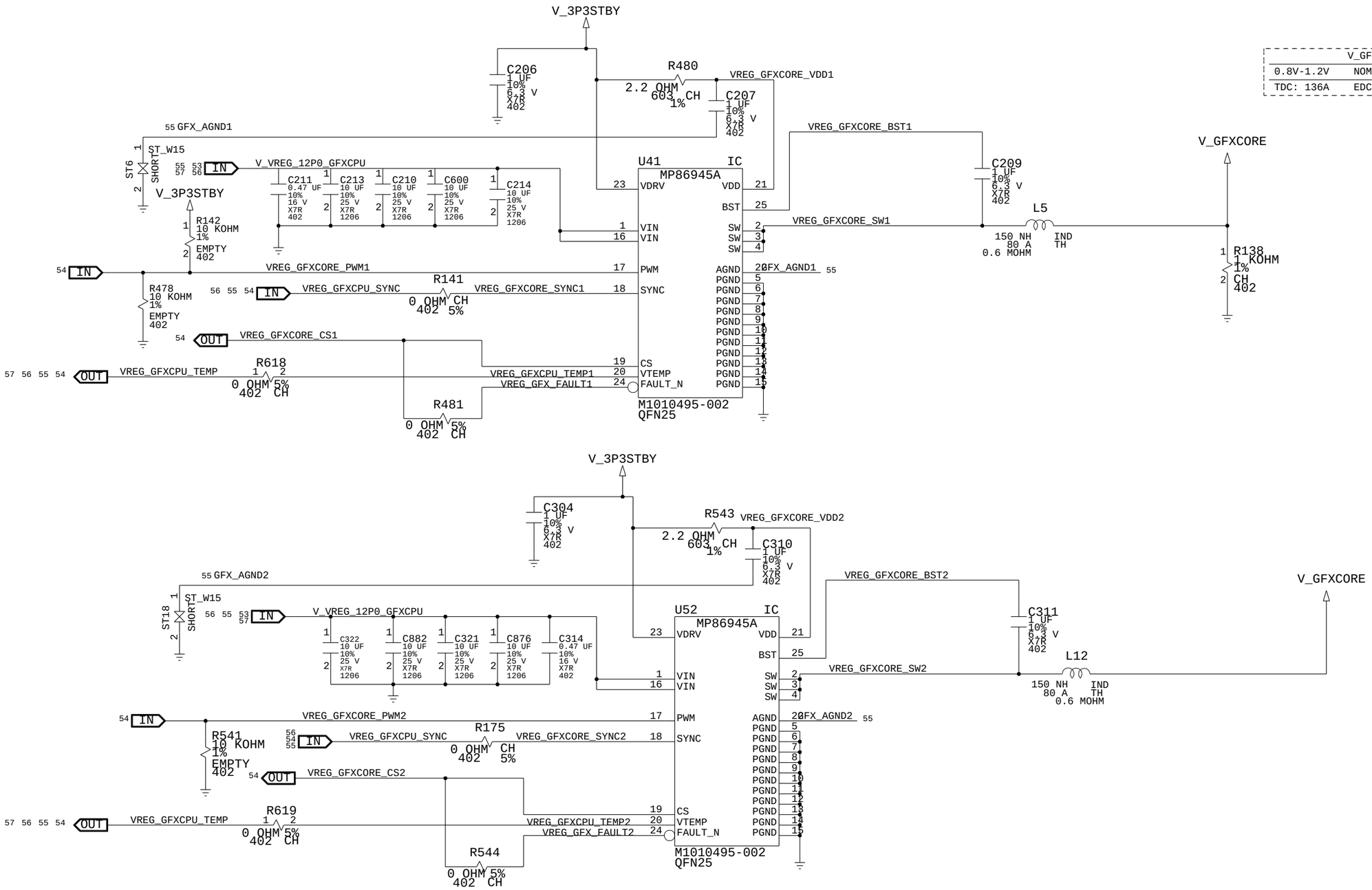

V_GFXCORE		
0.8V-1.2V	NOMINAL: 1V	
TDC: 136A	EDC: 175A	FSW: 700KHZ

NOTE: X6S/X7R CAPACITORS USED NEAR SOC
DUE TO HIGHER TEMPERATURES IN AREA

MICROSOFT CONFIDENTIAL	PROJECT NAME	PAGE	CSA PAGE	FAB	VER
	Cactus	55/82	55/82	G-R	0.991

VREGS: GFXCORE OUTPUT PHASE 3 & 4

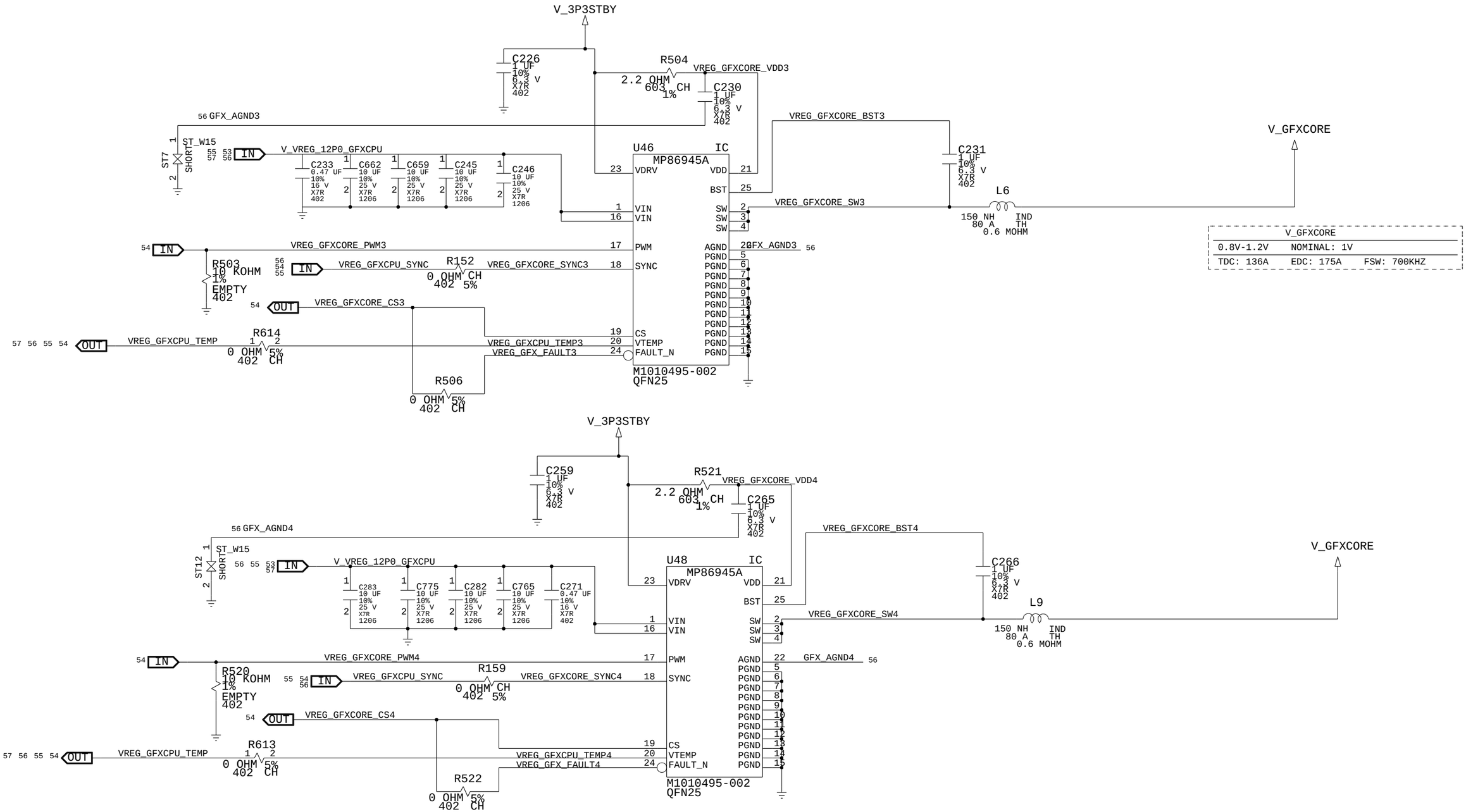

NOTE: X6S/X7R CAPACITORS USED NEAR SOC
DUE TO HIGHER TEMPERATURES IN AREA

MICROSOFT CONFIDENTIAL	PROJECT NAME	PAGE	CSA PAGE	FAB	VER
	Cactus	56/82	56/82	G-R	0.991

VREGS: CPUCORE OUTPUT PHASE

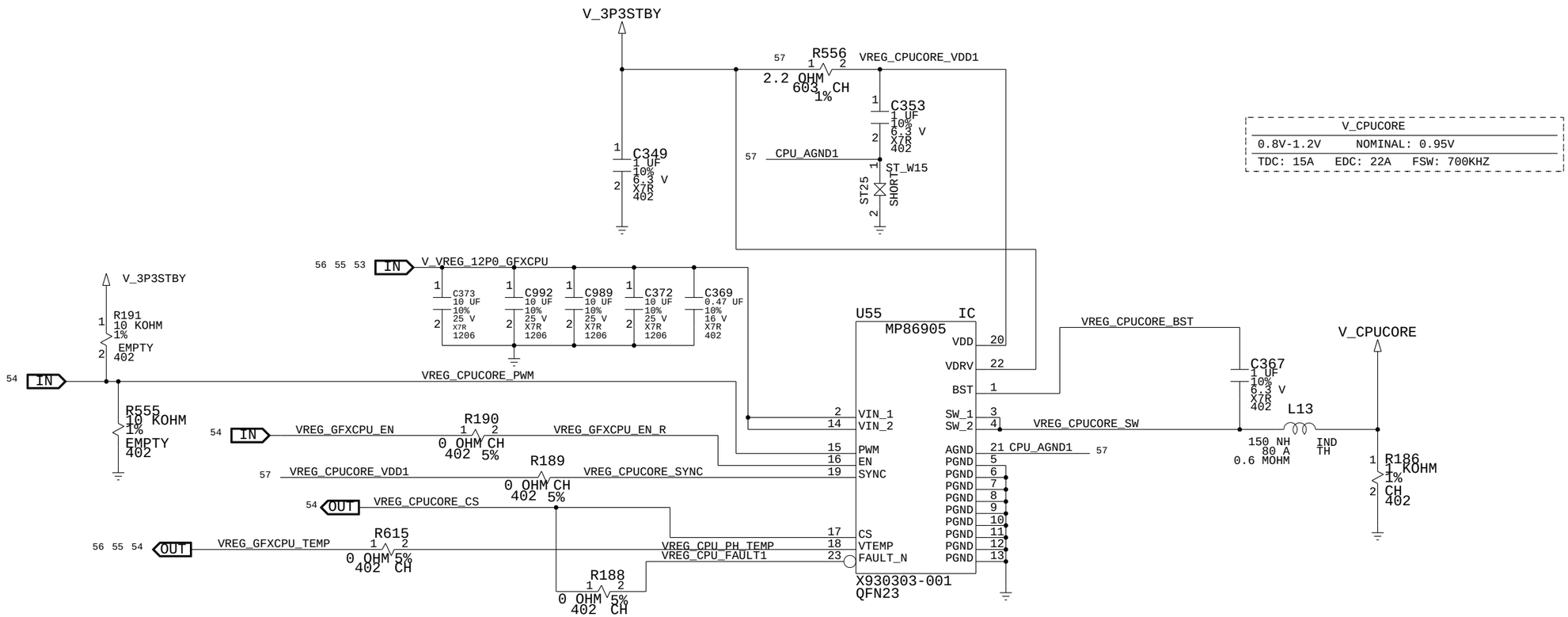

NOTE: X6S/X7R CAPACITORS USED NEAR SOC
DUE TO HIGHER TEMPERATURES IN AREA

MICROSOFT CONFIDENTIAL	PROJECT NAME	PAGE	CSA PAGE	FAB	VER
	Cactus	57/82	57/82	G-R	0.991

VREGS: MEMPHY / MEMIO

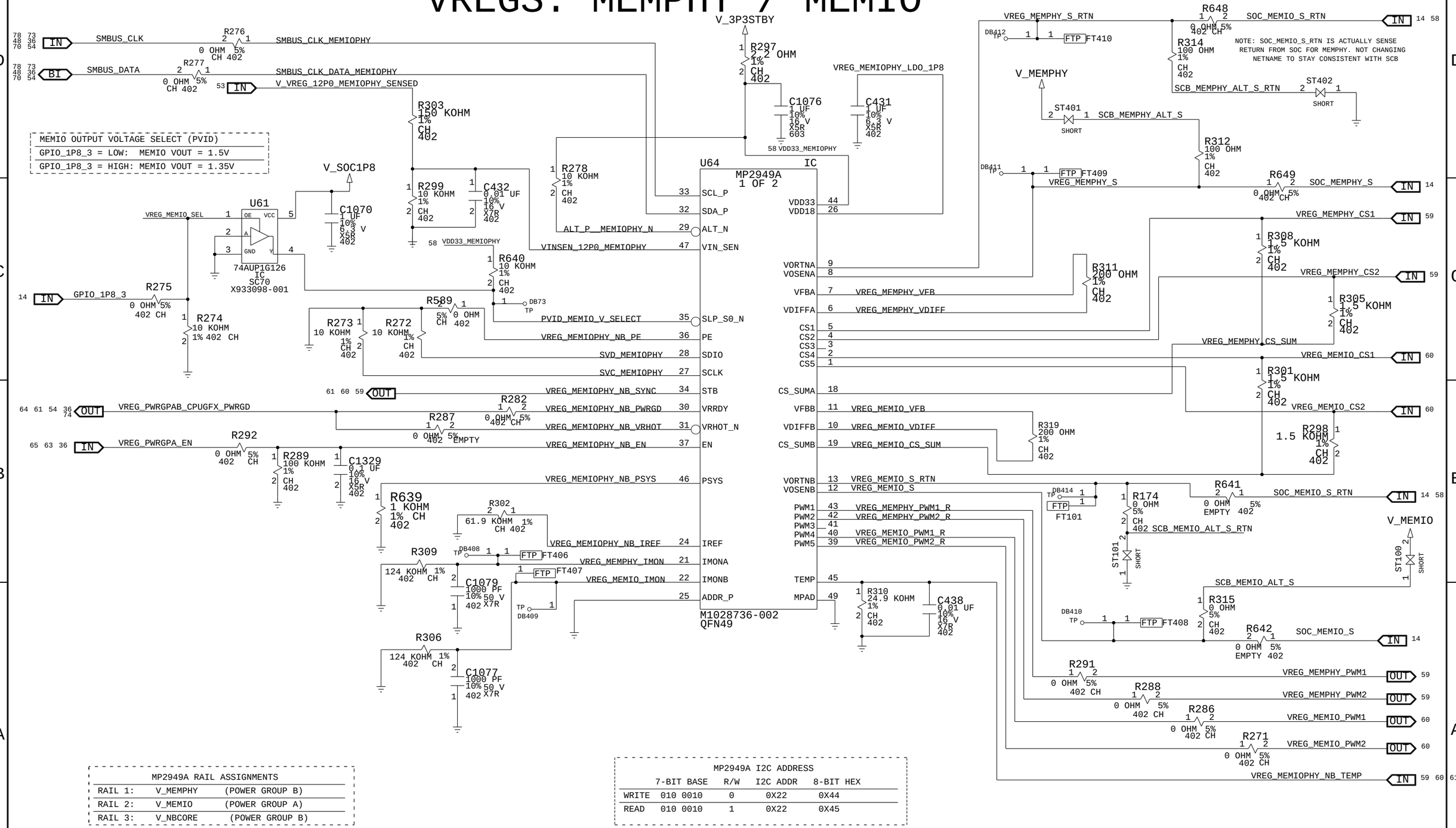

MP2949A RAIL ASSIGNMENTS		
RAIL 1:	V_MEMPHY	(POWER GROUP B)
RAIL 2:	V_MEMIO	(POWER GROUP A)
RAIL 3:	V_NBCORE	(POWER GROUP B)

MP2949A I2C ADDRESS				
	7-BIT BASE	R/W	I2C ADDR	8-BIT HEX
WRITE	010 0010	0	0X22	0X44
READ	010 0010	1	0X22	0X45

MICROSOFT CONFIDENTIAL	PROJECT NAME	PAGE	CSA PAGE	FAB	VER
	Cactus	58/82	58/82	G-R	0.991

VREGS: MEMPHY OUTPUT

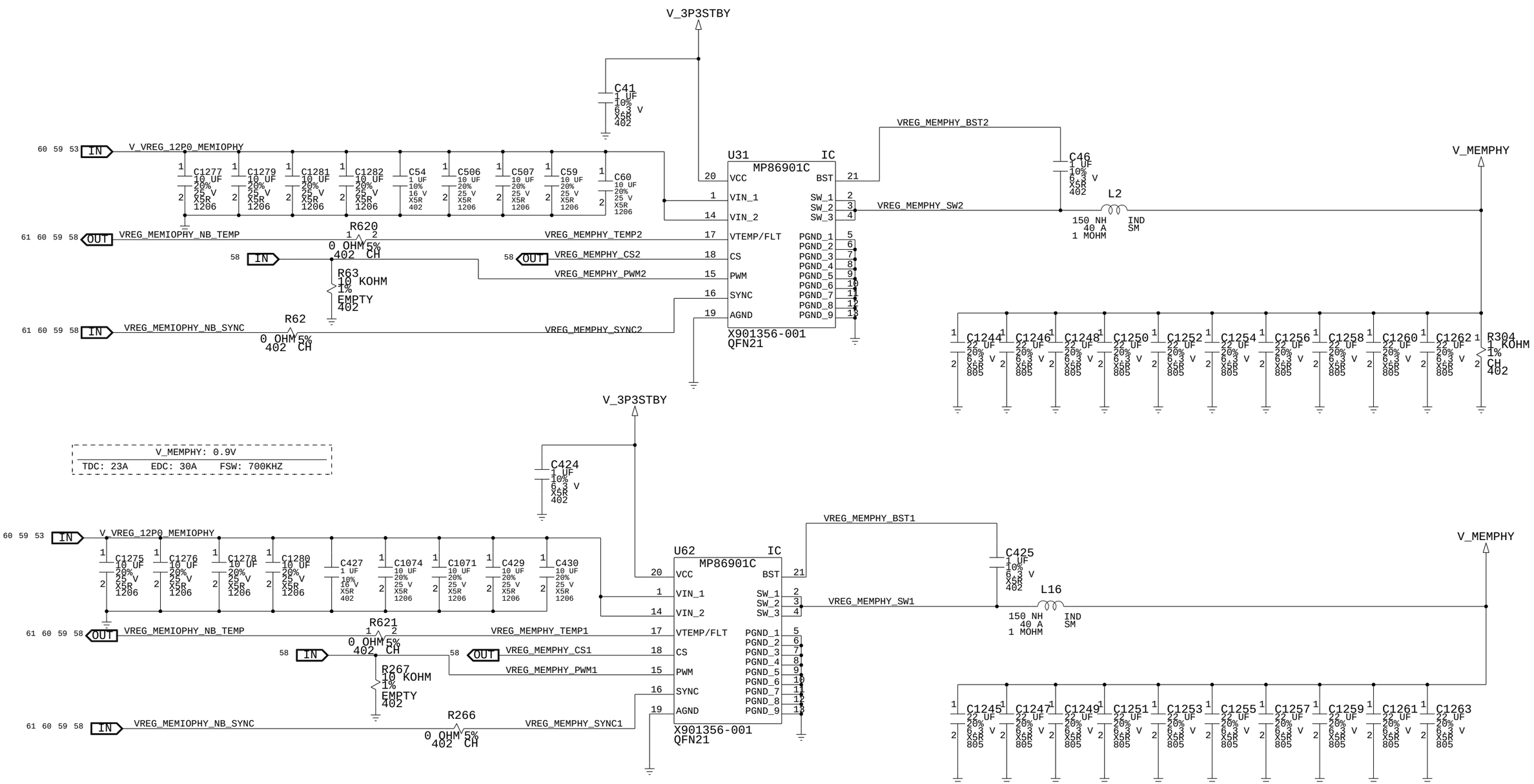

MICROSOFT CONFIDENTIAL	PROJECT NAME	PAGE	CSA PAGE	FAB	VER
	Cactus	59/82	59/82	G-R	0.99

VREGS: MEMIO OUTPUT

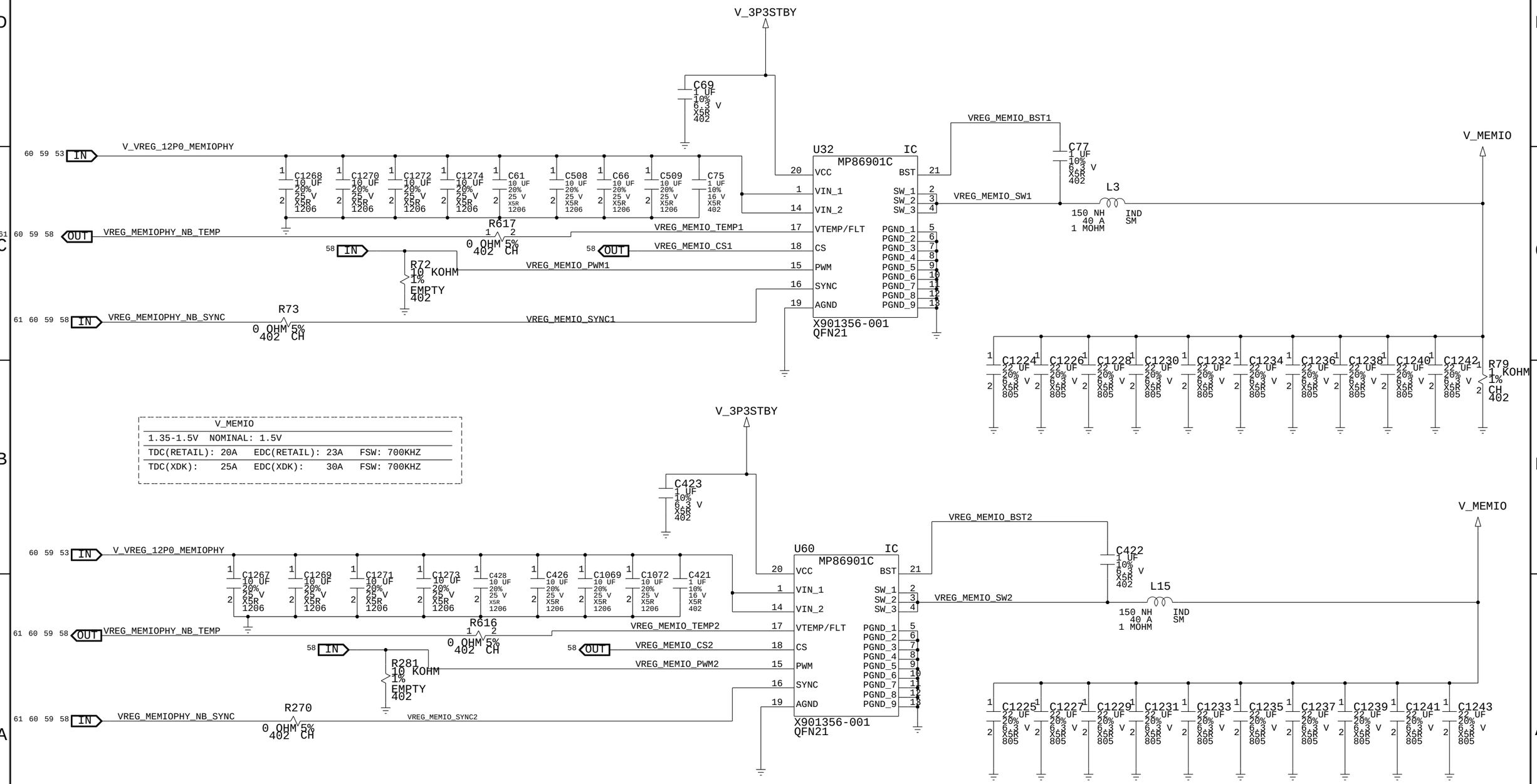

MICROSOFT CONFIDENTIAL	PROJECT NAME	PAGE	CSA PAGE	FAB	VER
	Cactus	60/82	60/82	G-R	0.991

VREGS: NBCORE

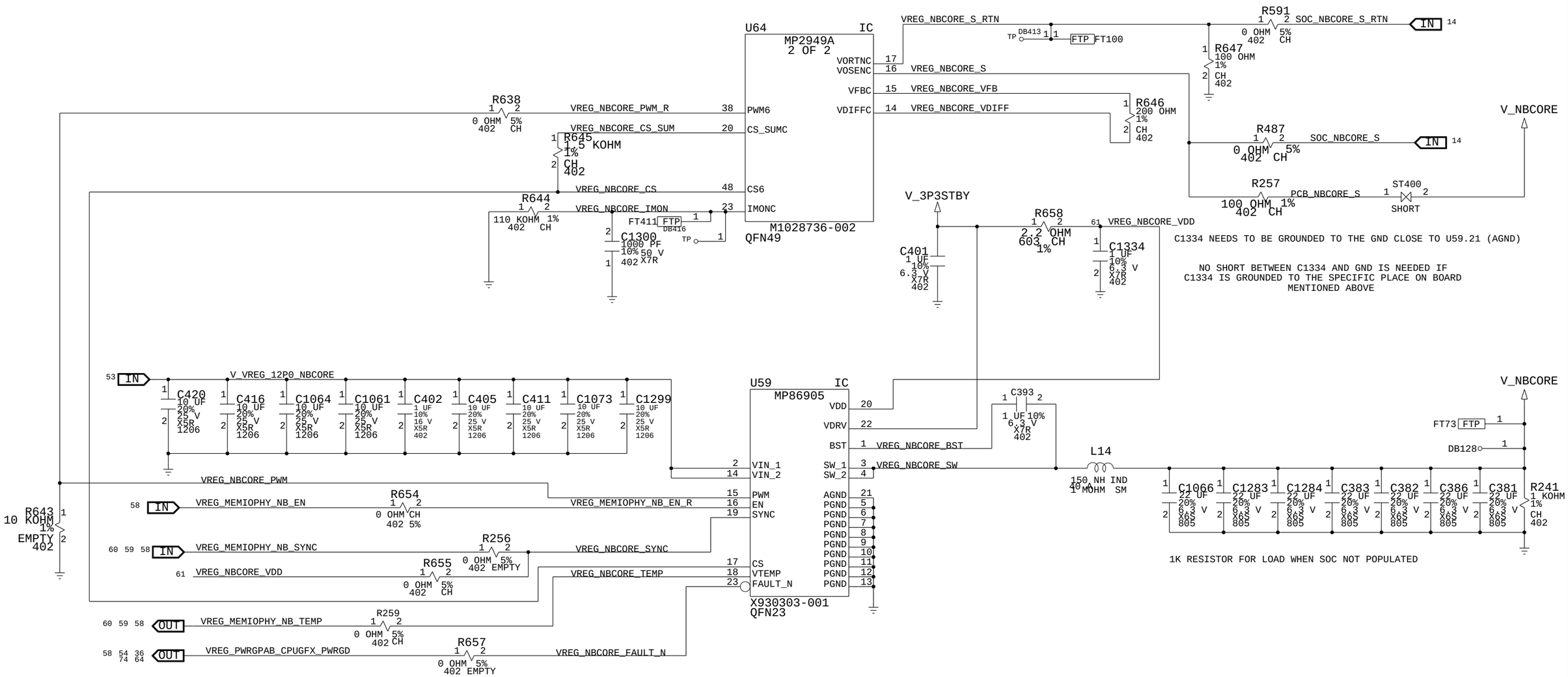

V_NBCORE		
0.8V-1.2V	NOMINAL: 0.95V	
TDC: 16A	EDC: 25A	FSW: 700KHZ

MICROSOFT CONFIDENTIAL	PROJECT NAME	PAGE	CSA PAGE	FAB	VER
	Cactus	61/82	61/82	G-R	0.99

VREGS: V5P0

V_5P0
NOM. VOLTAGE: 5.1

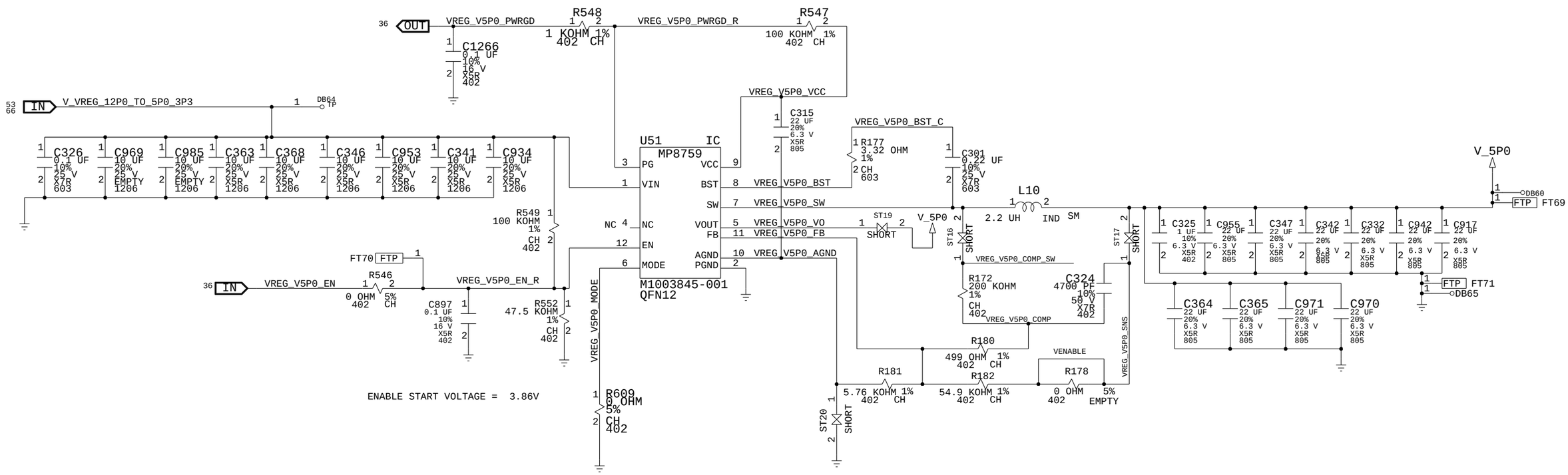

MICROSOFT CONFIDENTIAL	PROJECT NAME	PAGE	CSA PAGE	FAB	VER
	Cactus	62/82	62/82	G-R	0.991

VREGS: V3P3, VSOC1P8

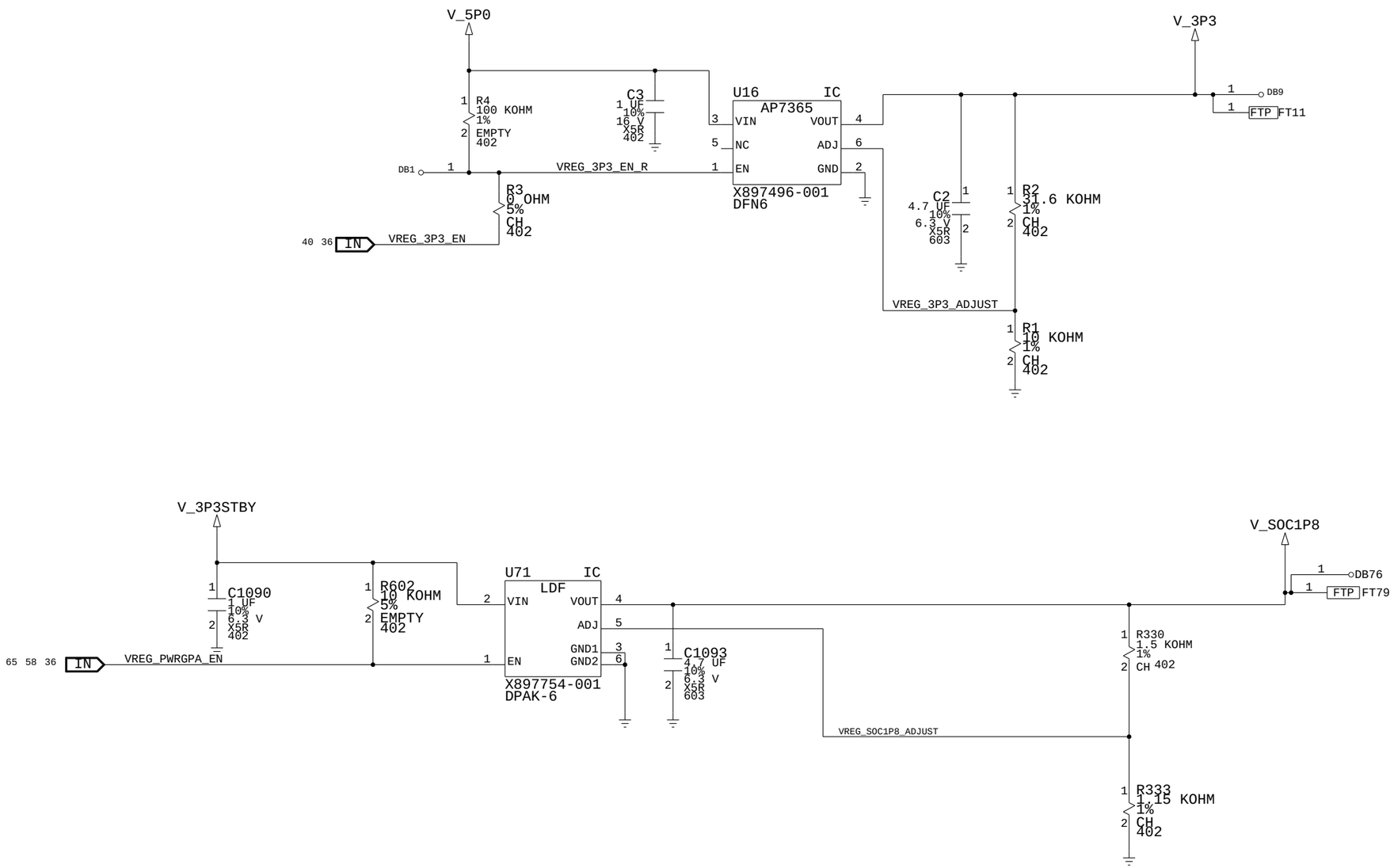

MICROSOFT CONFIDENTIAL	PROJECT NAME	PAGE	CSA PAGE	FAB	VER
	Cactus	63/82	63/82	G-R	0.991

VREGS: VSOCPHY/VFUSE

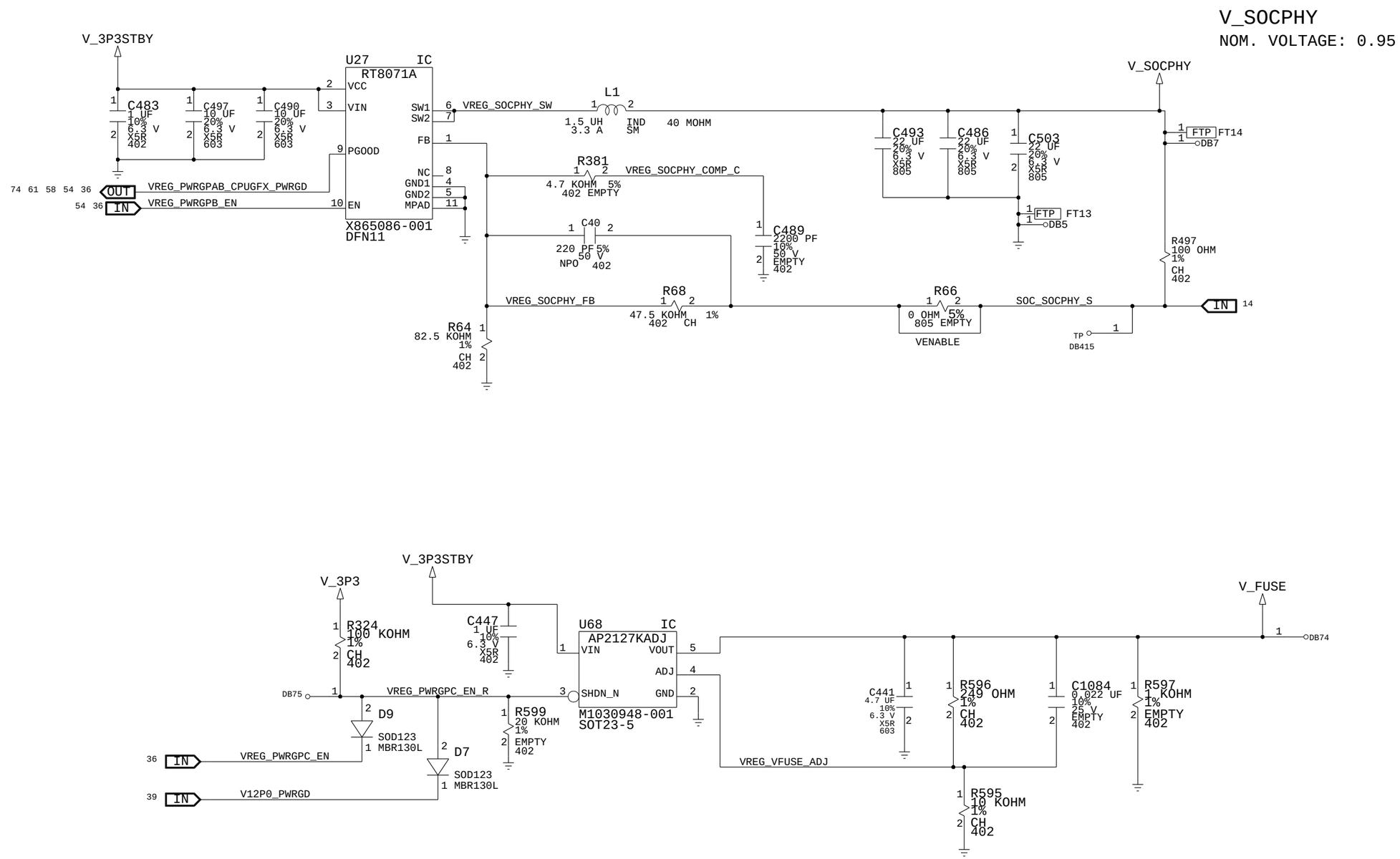

MICROSOFT CONFIDENTIAL	PROJECT NAME	PAGE	CSA PAGE	FAB	VER
	Cactus	64/82	64/82	G-R	0.991

VREGS: V_SB1P8, V_SB1P1

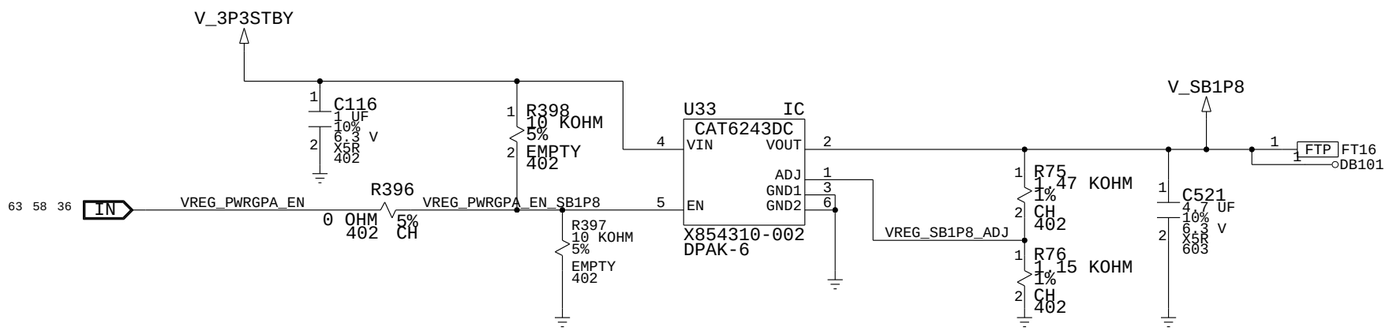

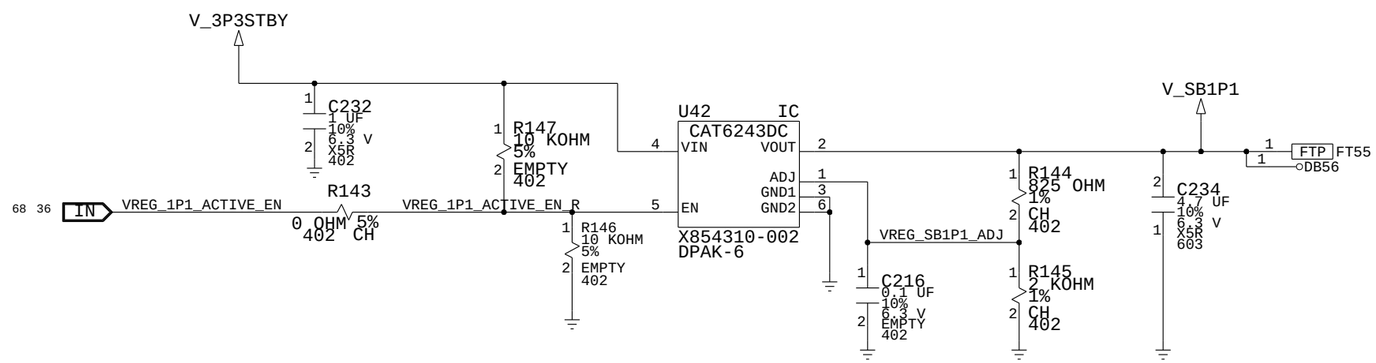

MICROSOFT CONFIDENTIAL	PROJECT NAME	PAGE	CSA PAGE	FAB	VER
	Cactus	65/82	65/82	G-R	0.991

VREGS: V3P3 STANDBY

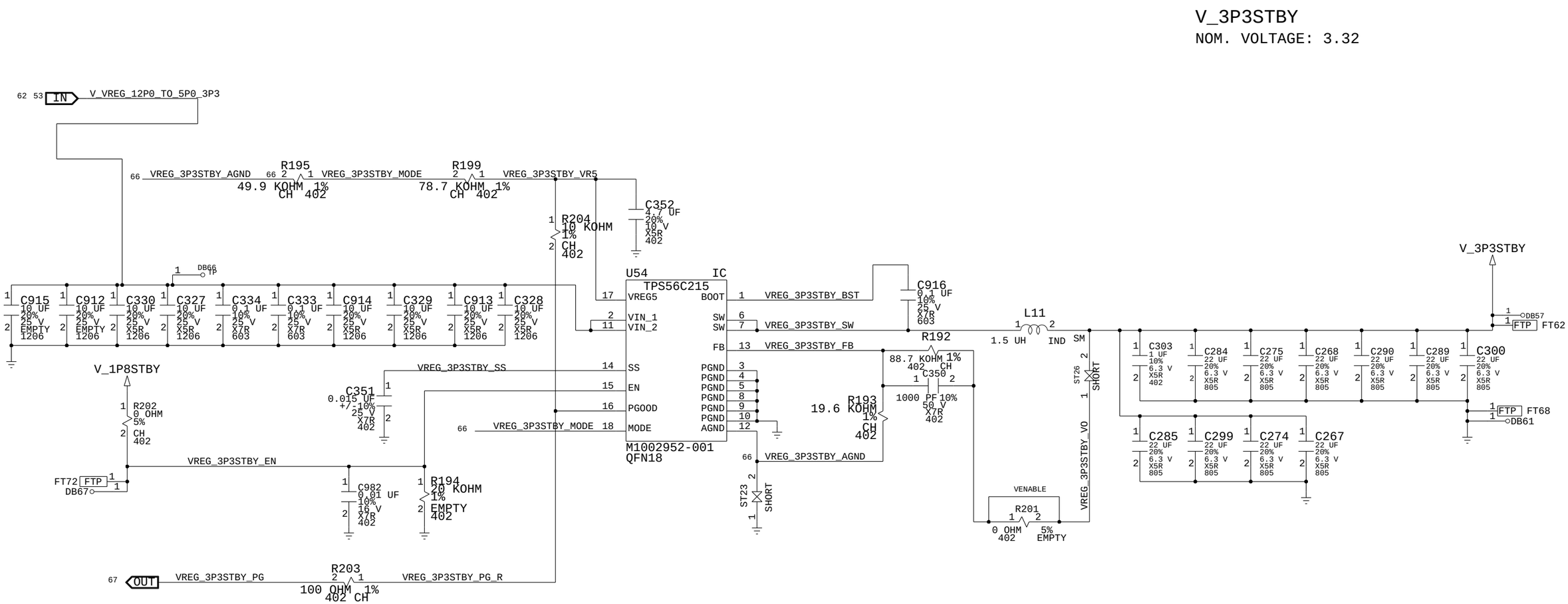

MICROSOFT CONFIDENTIAL	PROJECT NAME	PAGE	CSA PAGE	FAB	VER
	Cactus	66/82	66/82	G-R	0.99

VREGS: V1P1 STANDBY, V1P8 STANDBY

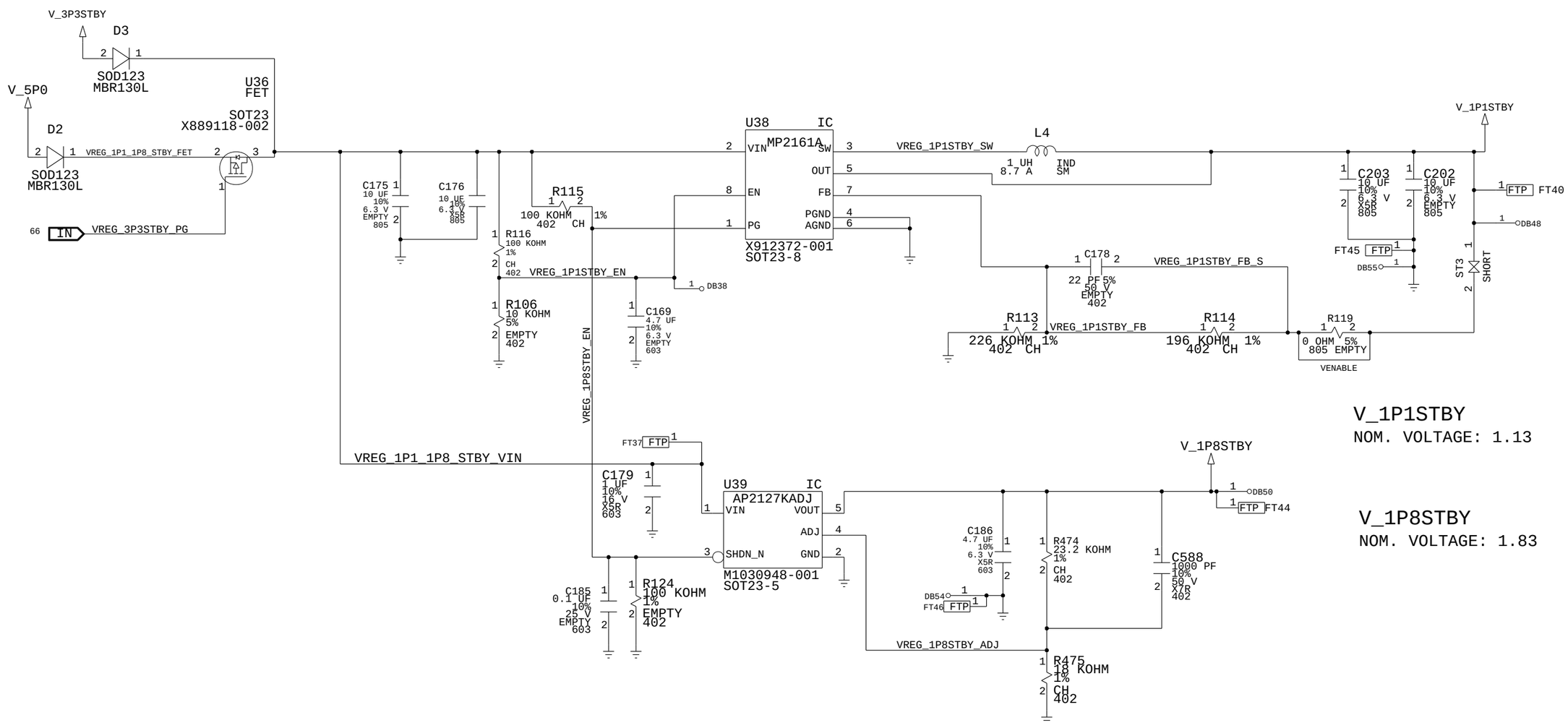

V_1P1STBY
NOM. VOLTAGE: 1.13

V_1P8STBY
NOM. VOLTAGE: 1.83

MICROSOFT CONFIDENTIAL	PROJECT NAME	PAGE	CSA PAGE	FAB	VER
	Cactus	67/82	67/82	G-R	0.99

STANDBY GATES

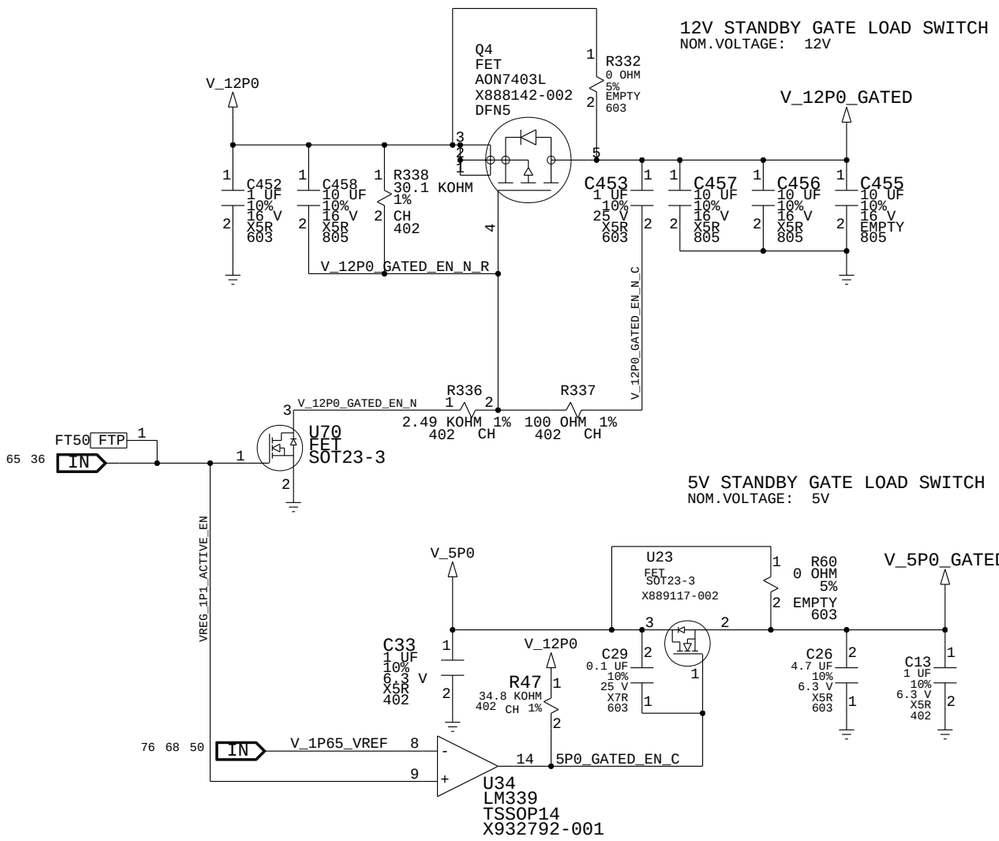

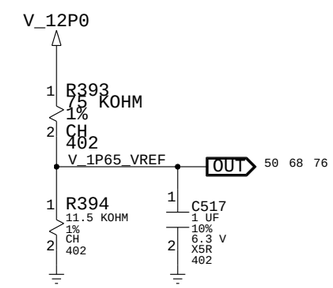

MICROSOFT CONFIDENTIAL	PROJECT NAME	PAGE	CSA PAGE	FAB	VER
	Cactus	68/82	68/82	G-R	0.991

IR BLASTER

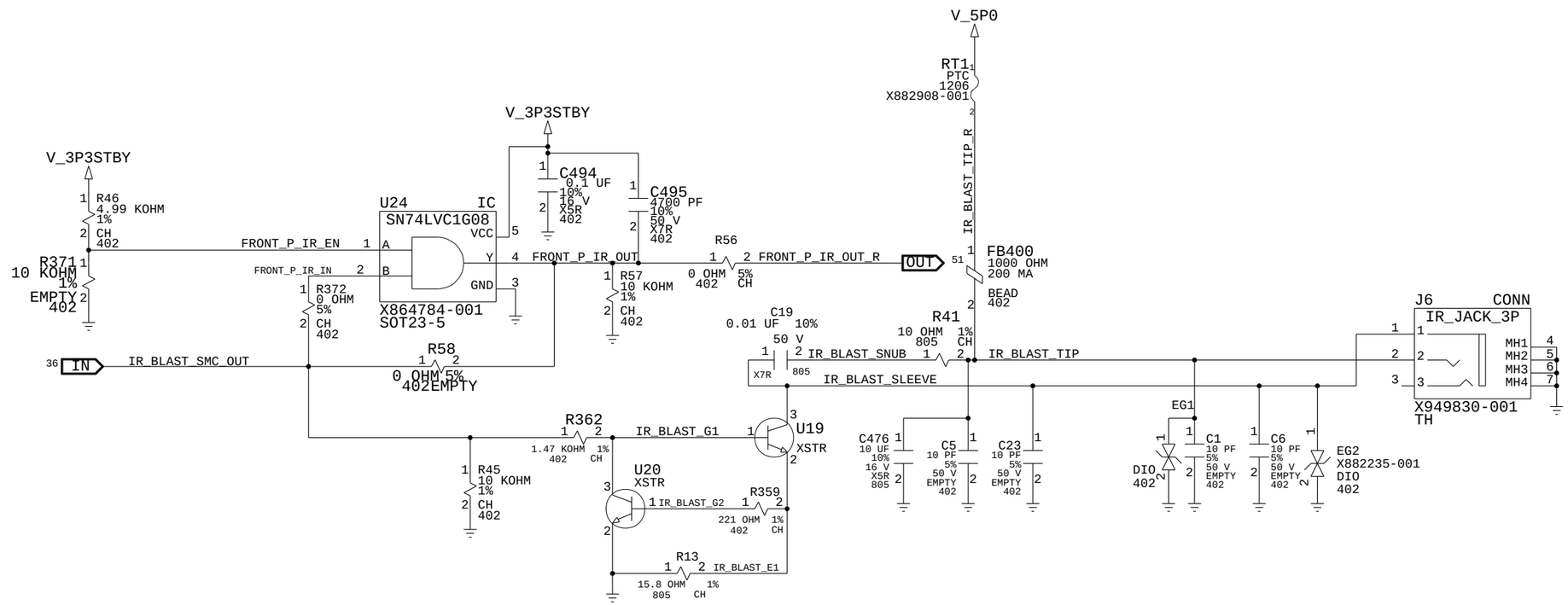

MICROSOFT CONFIDENTIAL	PROJECT NAME	PAGE	CSA PAGE	FAB	VER
	Cactus	69/82	69/82	G-R	0.991

I2C

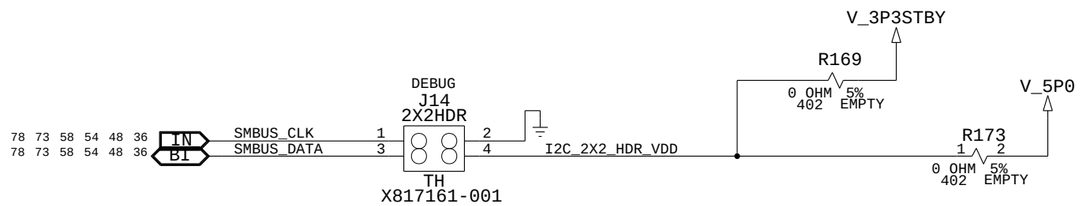

FOR AARDVARK, CAN CHOOSE 3.3V OR 5V VDD

MARGIN: SOCPHY,SOC1P8

BLANK

MONITOR: VSOC1P8,VSOCPHY,V12P0

BLANK

CONN: FACET BOARD

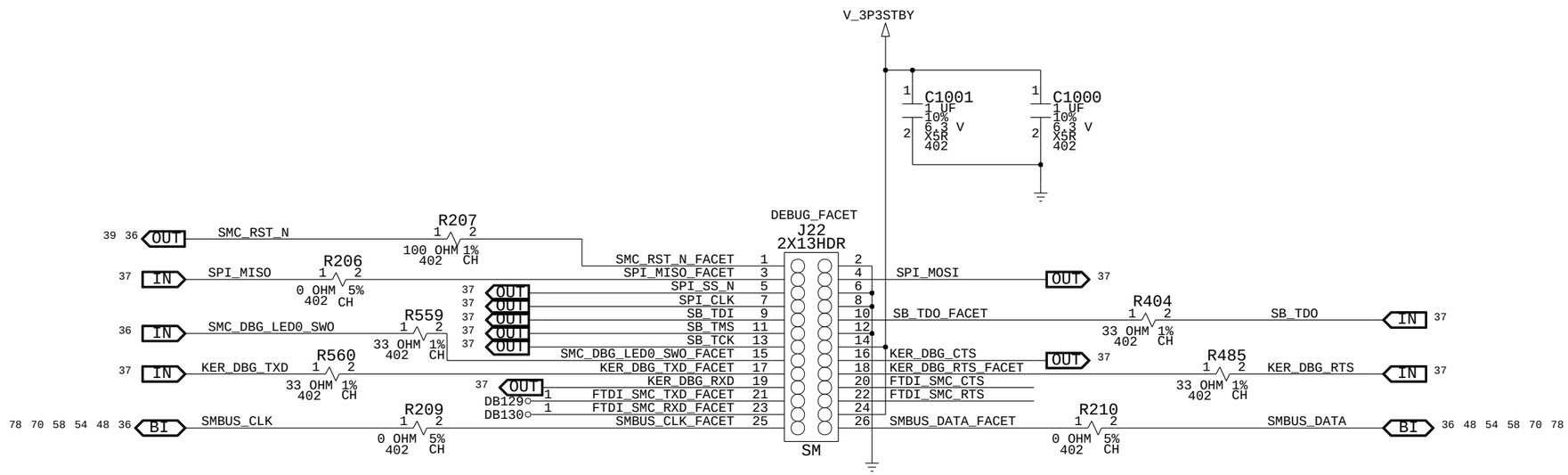

MICROSOFT CONFIDENTIAL	PROJECT NAME	PAGE	CSA PAGE	FAB	VER
	Cactus	73/82	73/82	G-R	0.991

CONN: SWITCHES

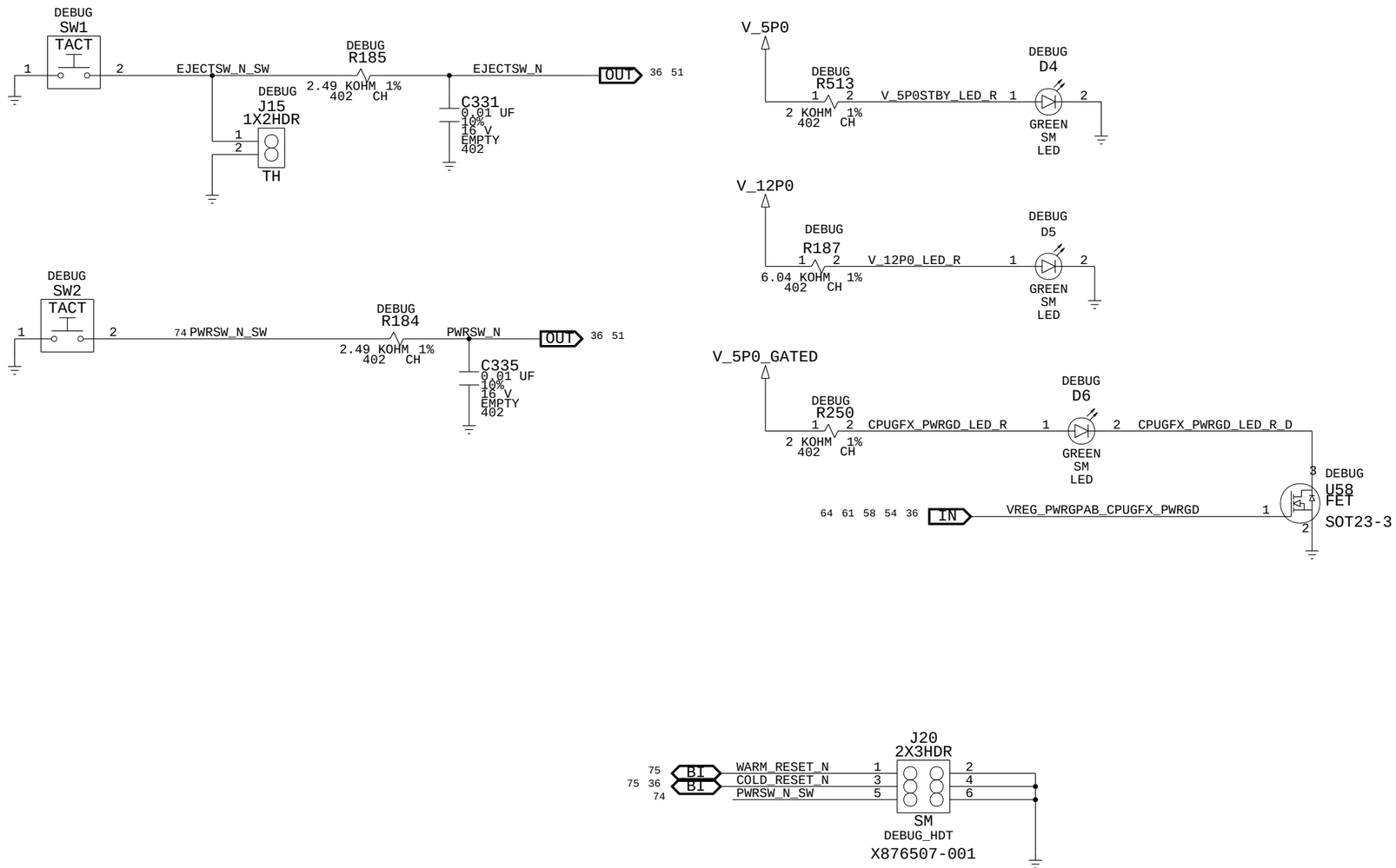

MICROSOFT CONFIDENTIAL	PROJECT NAME	PAGE	CSA PAGE	FAB	VER
	Cactus	74/82	74/82	G-R	0.991

CONN: HDT

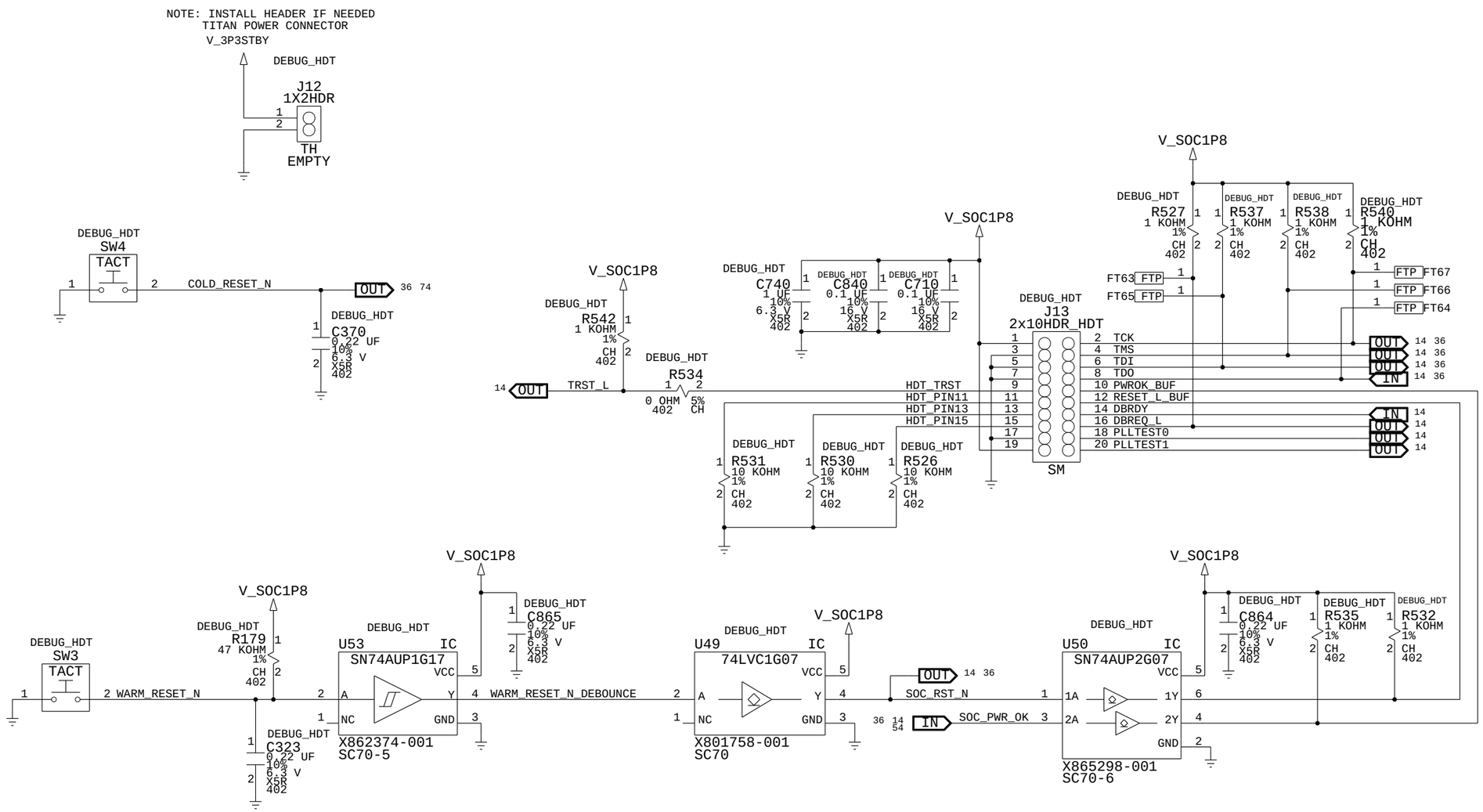

MICROSOFT CONFIDENTIAL	PROJECT NAME	PAGE	CSA PAGE	FAB	VER
	Cactus	75/82	75/82	G-R	0.991

CONN: M.2

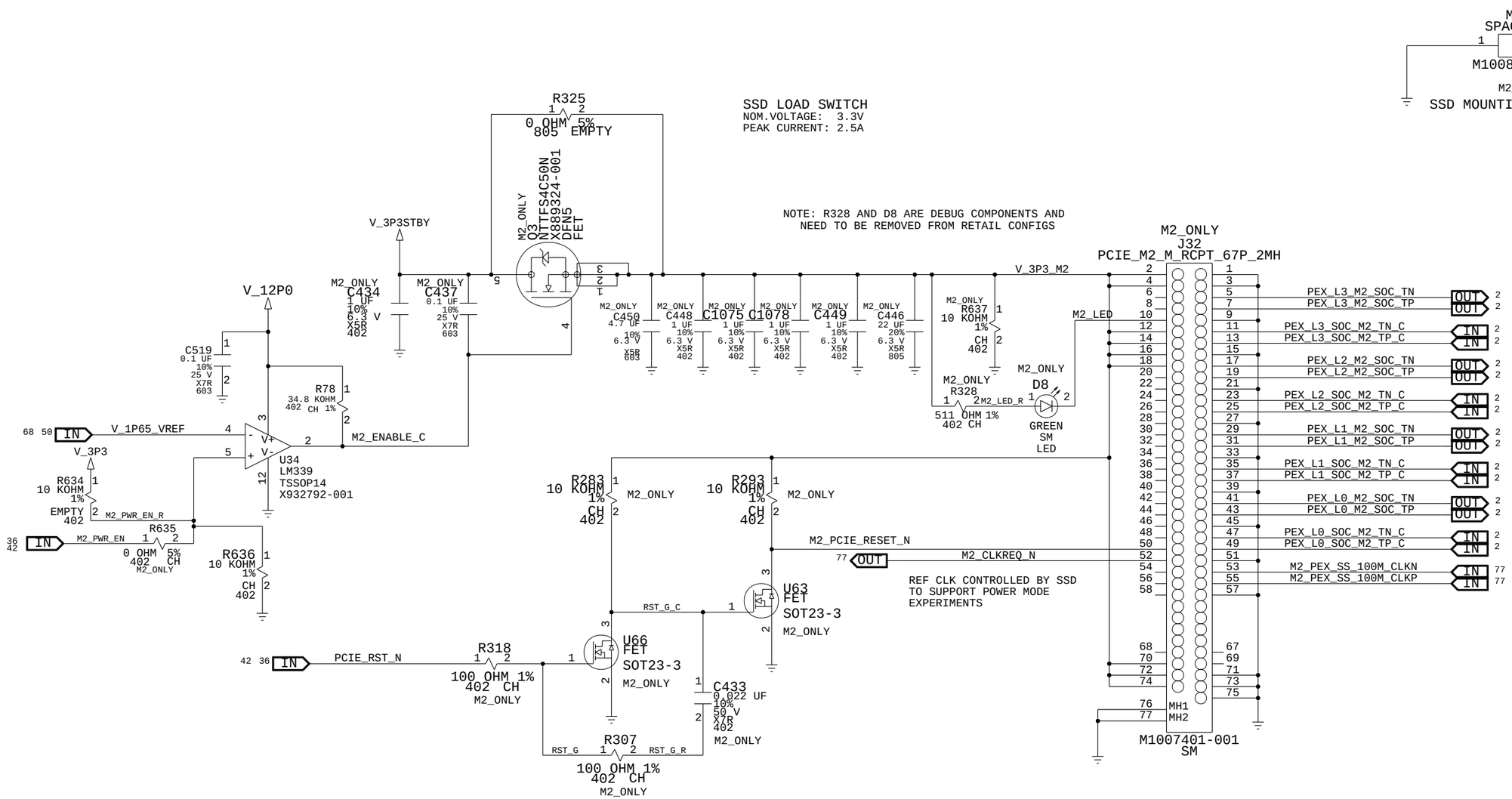

THE SSD HAS AN INTERNAL PULL-UP ON ITS PCIE RESET INPUT.
ISOLATION OF SIGNAL PCIE_RST_N IS NEEDED TO ISOLATE
SOUTHBRIDGE OUTPUT FROM SSD PULLUP

MICROSOFT CONFIDENTIAL	PROJECT NAME	PAGE	CSA PAGE	FAB	VER
	Cactus	76/82	76/82	G-R	0.991

CLOCK BUFFER

NOTES:

1.TO ENABLE ENET2 CLOCK ON J28 HEADER, UNSTUFF R85. U35 HAS INTERNAL PULL DOWN.

2.SEE PAGES 2 AND 79 FOR ADDITIONAL PCIE SPARE LANE INFORMATION

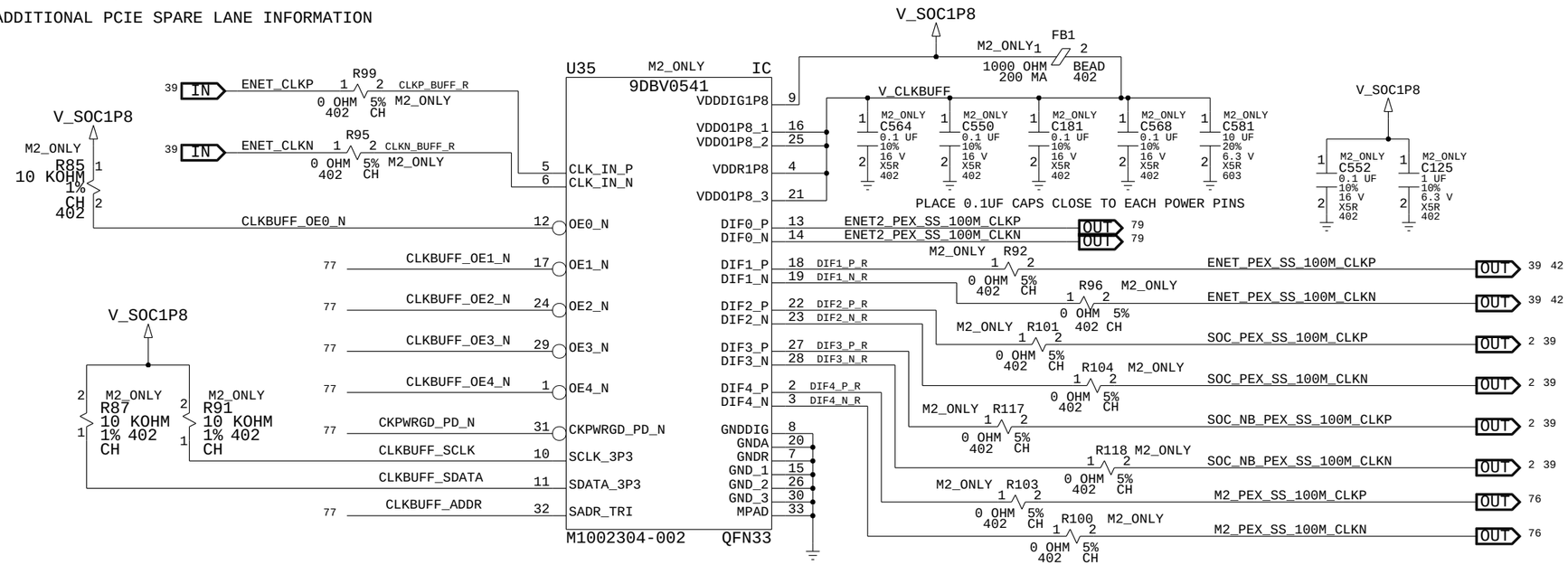

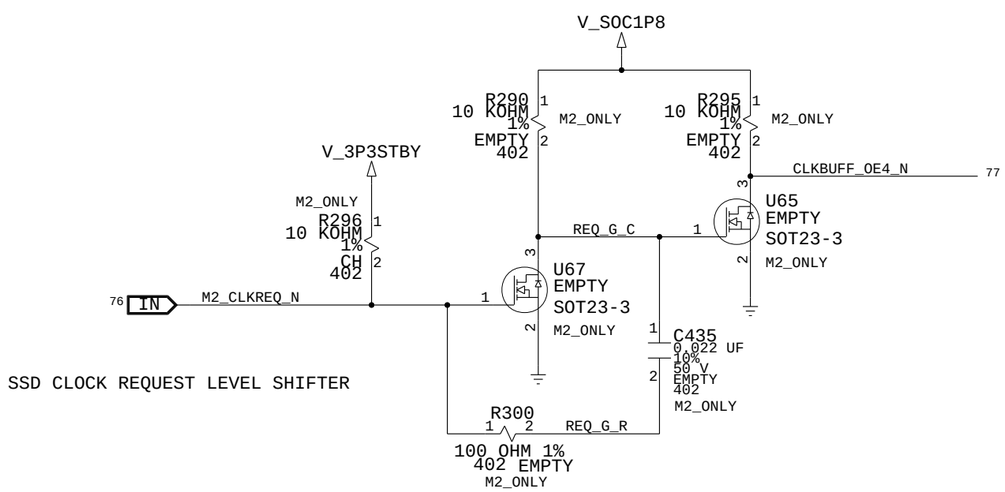

TO ADDRESS LONG TERM RELIABILITY CONCERNS
PERMANENT PULL UP/DOWN RESISTORS HAVE BEEN ADDED
EVEN THOUGH THIS PART HAS ITS OWN INTERNAL 100K EQUIVALENTS

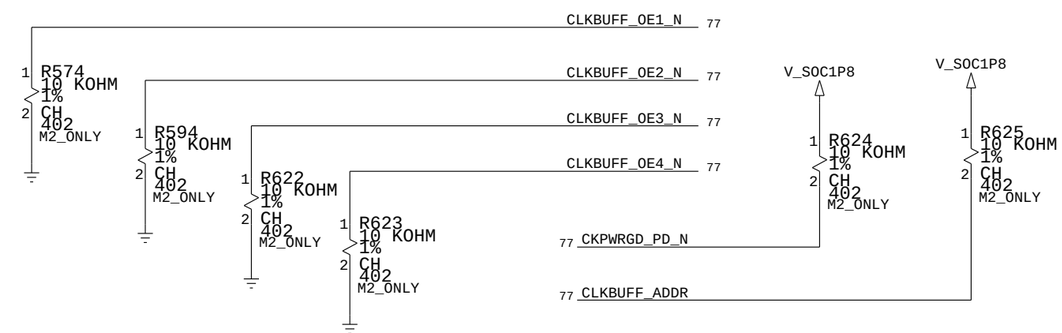

MICROSOFT CONFIDENTIAL	PROJECT NAME	PAGE	CSA PAGE	FAB	VER
	Cactus	77/82	77/82	G-R	0.99

PREMIUM SPEAKER (SE/LE)

PREMIUM/SE/LE SKU ONLY

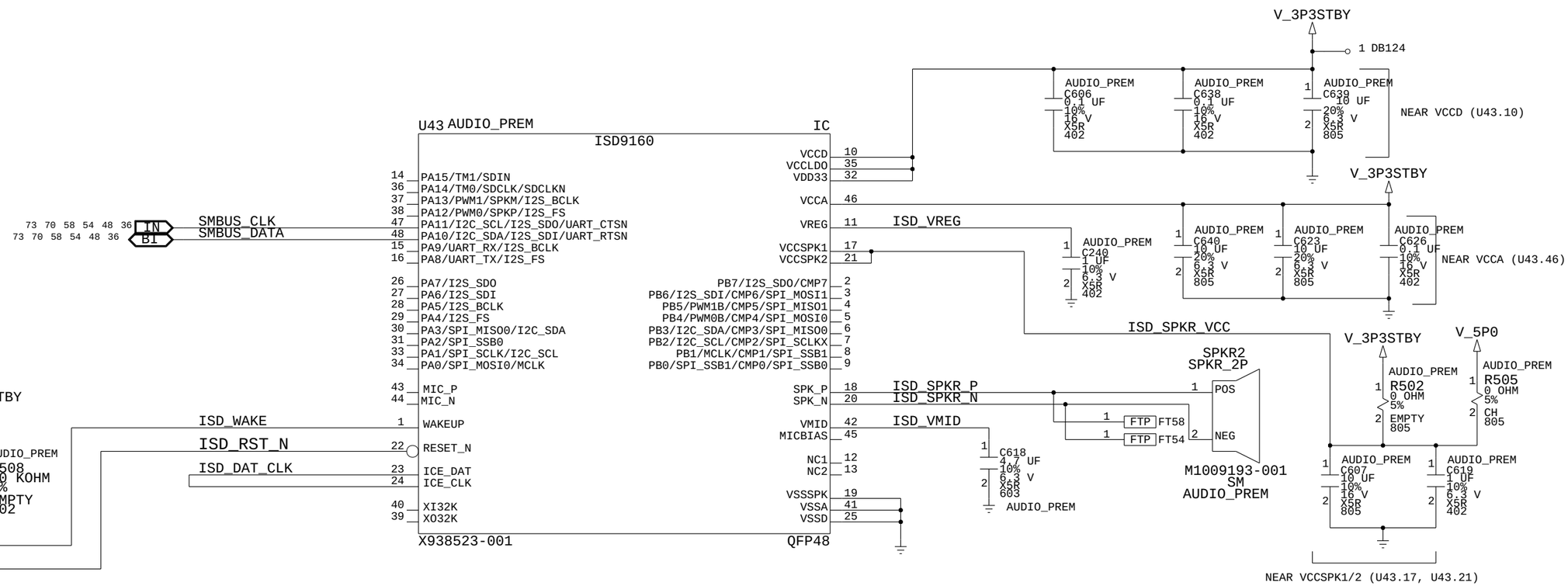

ISD9160FIMS05 - REMOVED CAP TOUCH FUNCTIONALITY

MICROSOFT CONFIDENTIAL	PROJECT NAME	PAGE	CSA PAGE	VER
	Cactus	78/82	78/82	0.991

DEBUG: VR HEADERS, TEST POINTS, CONNECTORS

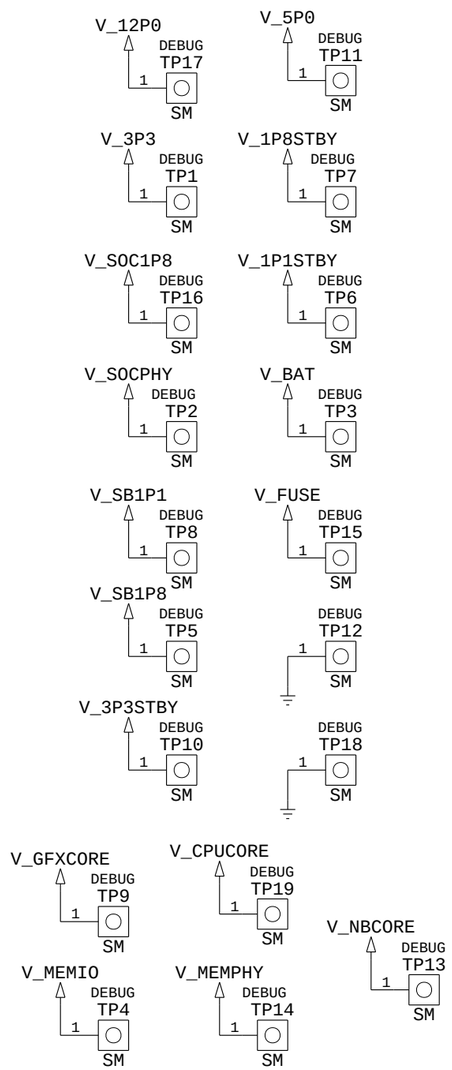

NOTE: THESE TEST POINTS ARE NOT TO BE USED FOR VOLTAGE REGULATOR QUALIFICATION TEST POINTS

PCIE CONNECTORS

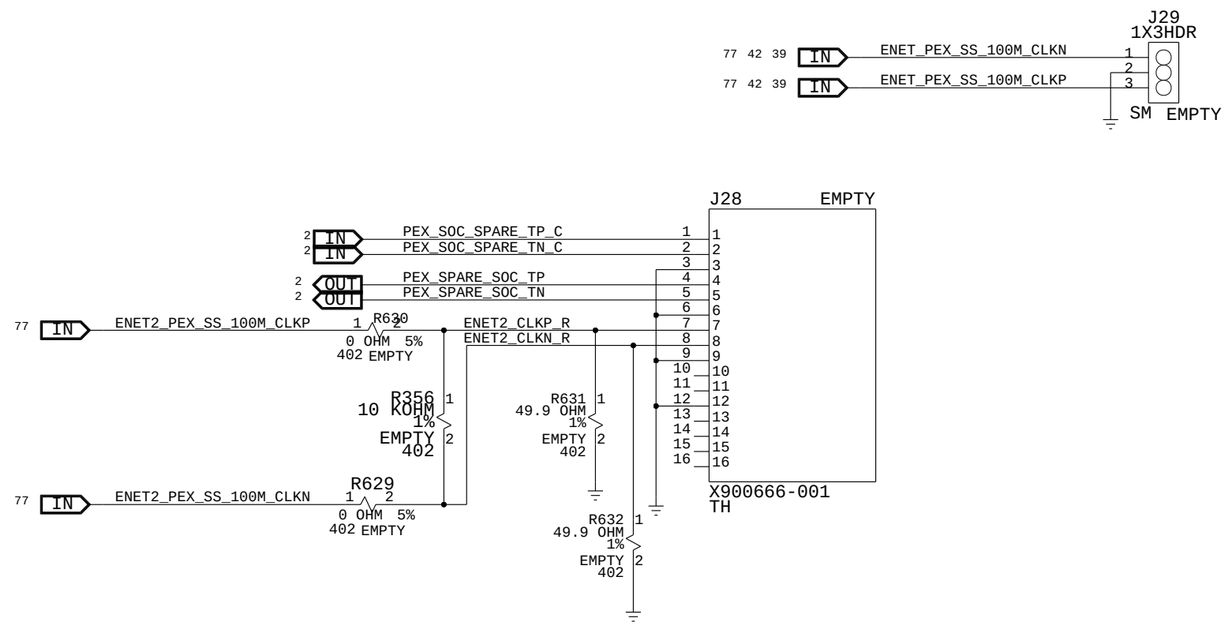

NOTES: TO ENABLE 100 MHZ REF CLOCK ON HEADER J28:

1. WHEN CLOCK BUFFER U35 IS INSTALLED: POPULATE R629 AND R630.
2. WITHOUT CLOCK BUFFER INSTALLED:
   A. POPULATE R631 AND R632.
   B. WIRE JUMPER ETHERNET 100 MHZ CLOCK FROM HEADER J29.1 AND J29.3 TO J28.8 AND J28.7 RESPECTIVELY.
3. SEE PAGES 2 AND 77 FOR ADDITIONAL PCIE SPARE LANE INFORMATION.

LABELS AND MOUNTING

HEAT SINK MOUNTING HOLES

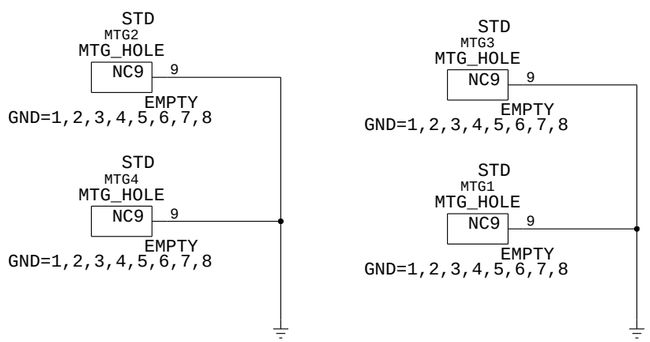

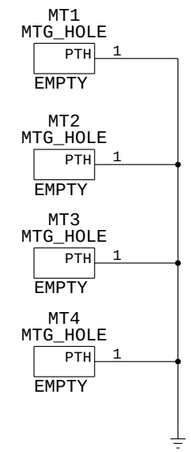

SCREW BOSS

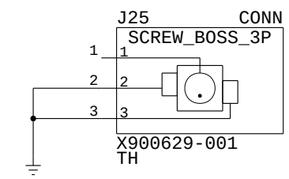

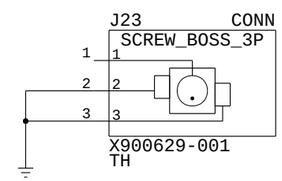

INTELLIGENT SERIAL NUMBER TARGET

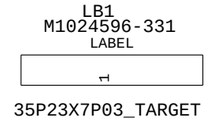

GND PADS FOR HEATSINK ALIGNMENT PINS

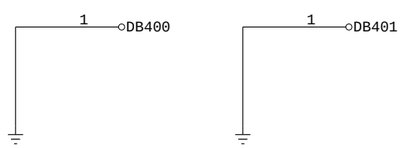

MS_PART#	MATL	REF_DES	DESCR.	BOM PROPERTY
NA	FR4	PCB1	PCB,CACTUS,FAB G RETAIL,8 LAYERS,GI	PCB_GI
M1037358-002	FR4	PCB1	PCB,CACTUS,FAB G RETAIL,8 LAYERS,OSP	PCB_OSP

FRONT PANEL USB - NESTED PCB

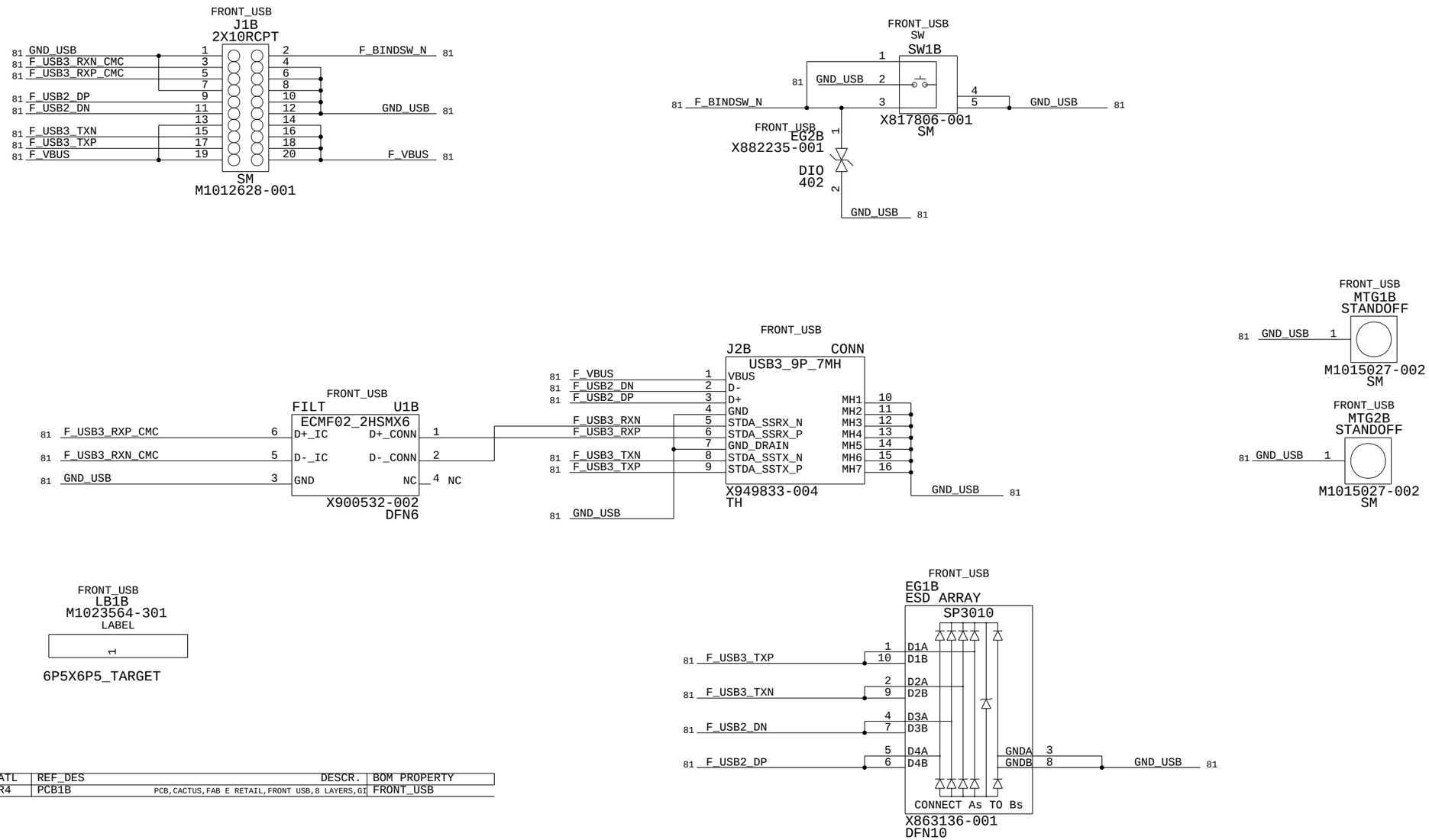

MS_PART#	MATL	REF_DES	DESCR.	BOM PROPERTY
M1033394-001	FR4	PCB1B	PCB,CACTUS,FAB E RETAIL,FRONT USB,8 LAYERS,GI	FRONT_USB

MICROSOFT CONFIDENTIAL	PROJECT NAME	PAGE	CSA PAGE	VER
	Cactus	81/82	81/82	0.991

BOM DEFINITIONS

BOM	DEFINTION
AUDIO	INCLUDES COMPONENTS FOR THE STANDARD AUDIO SOLUTION
AUDIO_PREM	INCLUDES COMPONENTS FOR THE PREMIUM SE/LE SPEAKER SOLUTION
COMMON	ALL COMPONENTS WITH NO BOM PROPERTY
DEBUG	COMPONENTS REQUIRED FOR BRING UP & DEBUG
DEBUG_HDT	HDT-RELATED DEBUG COMPONENTS
DEBUG_SHUNT	COMPONENTS WHICH ARE ON DEBUG BOARDS, BUT ARE REMOVED/SHORTED ON RETAIL
EMMC_BASE	DUMMY PLACE HOLDER FOR EMMC DEVICE & RESISTORS. NEVER USE THIS IN THE RECIPE FILE. SELECT ONE OF THESE INSTEAD: EMMC_HYNIX_16NM, EMMC TOSHIBA_15NM, EMMC SAMSUNG_14NM
EMMC_HYNIX_16NM	HYNIX EMMC DEVICE
EMMC_SAMSUNG_14NM	SAMSUNG EMMC DEVICE
EMMC_TOSHIBA_15NM	TOSHIBA EMMC DEVICE
GDDR5_BASE	DUMMY PLACE HOLDER FOR GDDR5. NEVER USE THIS IN THE RECIPE FILE. SELECT ONE OF THESE INSTEAD: EMMC_HYNIX_16NM, EMMC TOSHIBA_15NM, EMMC SAMSUNG_14NM
GDDR5_HYNIX	HYNIX GDDR5 MEMORY
GDDR5_SAMSUNG	SAMSUNG GDDR5 MEMORY
FRONT_USB	COMPONENTS ON THE FRONT PANEL USB
KIC_BASE	DUMMY PLACE HOLDER FOR KIC. NEVER USE THIS IN THE RECIPE FILE. USE ONE OF THESE INSTEAD: KIC_DEV OR KIC_RETAIL
KIC_DEV	DEBUG VERSION OF KRAKEN
KIC_RETAIL	RETAIL VERSION OF KRAKEN
M2_ONLY	POPULATE TO SUPPORT AN M.2 INTERFACE
NO_M2	POPULATE WHEN THERE IS NO M2. INTERFACE
PCB_GI	FAB TYPE: GOLD
PCB_OSP	FAB TYPE: ORGANIC SOLDERABILITY PRESERVATIVE GREEN SOLDERMASK
PCB_OSP_BLACK	FAB TYPE: ORGANIC SOLDERABILITY PRESERVATIVE BLACK SOLDERMASK
RTC_RETAIL	RTC CIRCUIT IMPLEMENTATION FOR RETAIL BOARDS
RTC_XDK	RTC CIRCUIT IMPLEMENTATION FOR XDK BOARDS
SOC_BASE	DUMMY PLACE HOLDER FOR SOC. NEVER USE THIS IN THE RECIPE FILE. SELECT ONE OF THESE INSTEAD: EMMC_HYNIX_16NM, EMMC TOSHIBA_15NM, EMMC SAMSUNG_14NM
SOC_EMPTY	DOES NOT STUFF ANUBIS
SOC_INCLUDE	STUFFS ANUBIS
VR_FIXED	SET ALL VRS TO FIXED VOLTAGES (NON-MARGINED). EXCLUDES V_MEMIO. MUST BE USED IN CONJUNCTION WITH NOT VR_MM
VR_MM	ALLOWS MOST VRS TO BE MARGINED FOR M&M BOARDS. EXCLUDES V_MEMIO. MUST BE USED IN CONJUNCTION WITH NOT VR_FIXED